Safety Manual

DS230 / DS240 series

Safety monitor for SinCos and incremental encoders / sensors

Product features:

- Monitoring underspeed, overspeed, standstill and direction of rotation
- SIL3 and PLe certification
- Safety functions equivalent to EN61800-5-2 (SS1, SS2, SOS, SLS, SDI, SSM)
- Mounting to 35 mm top hat rail (according to EN 60715)
- USB interface for simple parametrization by the OS 6.0 operator surface
- Optional available display and programming unit BG230 for parametrization and indication
- Inputs for: 2 SinCos encoders
  2 RS422 incremental encoders
  2 HTL/PNP incremental encoders, proximity switches or control signals
- Outputs: 1 Relay Output 5 … 36 VDC (NO), (safety related)
  1 Analog Output 4 … 20 mA, (safety related)
  4 Control HTL Outputs, (safety related)
- Signal splitter: 1 SinCos Splitter Output, (safety related)
  1 RS422 Splitter Output, (safety related)

Available devices:

- DS230: All inputs and outputs as well as signal splitter function
- DS236: All inputs and outputs, but without signal splitter function
- DS240: 1 SinCos input (SIL3/PLe), 2 control inputs, all outputs, with signal splitter function
- DS246: 1 SinCos input (SIL3/PLe), 2 control inputs, all outputs, without signal splitter

Version:	Description:
Ds23001a_oi_e.doc/mb/07/14	First edition pre series
Ds23003a_oi_e.doc/sn/ag/06/15	First edition series

Rechtliche Hinweise:
All contents included in this manual are protected by the terms of use and copyrights of motrona GmbH. Any reproduction, modification, usage or publication in other electronic and printed media as well as in the internet requires prior written authorization by motrona GmbH.

Table of Contents

1. Safety Instructions and Responsibility 5
   1.1. General Safety Instructions 5
   1.2. Use according to the intended purpose 5
   1.3. Installation 6
   1.4. Cleaning, Maintenance and Service Notes 6
2. Introduction 7
3. Available Models 8
4. Block Diagrams and Connections 9
   4.1. DS230 Block Diagram 9
   4.2. DS230 Connections 9
   4.3. DS236 Block Diagram 10
   4.4. DS236 Connections 10
   4.5. DS240 Block Diagram 11
   4.6. DS240 Connections 11
   4.7. DS246 Block Diagram 12
   4.8. DS246 Connections 12
5. Description of Connections 13
   5.1. Power Supply 14
   5.2. Encoder Supply 15
   5.3. SinCos-Inputs 19
   5.4. RS422-Inputs 20
   5.5. HTL / Control Inputs 21
   5.6. SinCos-Splitter-Output 22
   5.7. RS422-Splitter-Output 23
   5.8. Analog-Output 4 to 20 mA 24
   5.9. Control-Outputs 25
   5.10. Relay-Output 26
   5.11. DIL switch 27
   5.12. Interface for Display Unit BG230 28
   5.13. USB Interface for the OS6.0 Operator Surface 29
   5.14. LEDs / Status Indication 30

6. Operational Modes 31
6.1. Operational Modes of DS23x types 31
6.2. Operational Mode of DS24x types 32
6.3. Achievable Safety Levels of DS23x 33
6.4. Achievable Safety Level of DS24x 34
6.5. „Operational Mode“ = 0 (DS23x) 35
6.6. „Operational Mode“ = 0 (DS24x) 36
6.7. „Operational Mode“ = 1 37
6.8. „Operational Mode“ = 2 38
6.9. „Operational Mode“ = 3 39
6.10. „Operational Mode“ = 4 40
6.11. „Operational Mode“ = 5 41
6.12. „Operational Mode“ = 6 42
6.13. „Operational Mode“ = 7 43
6.14. „Operational Mode“ = 8 44
6.15. „Operational Mode“ = 9 45
7. Start-Up the Unit 46
7.1. Setup by PC 47
7.2. Setup by the Programming Module BG230 48
7.3. Parameter / Menu Overview 49
7.4. Parameter Description 51
8. Start-Up the Plant 78
8.1. Cabinet installation 78
8.2. Parametrization 79
8.3. Preparation before first start-up 84
8.4. Checklist for Parameter Settings 85
8.5. Definition of the Directions 85
8.6. Sensor Channel Adaption 86
8.7. Completion of Commissioning 88
9. Error Detection 89
9.1. Error Representation 89
9.2. Initial Error 90
9.3. Runtime Error 91
9.4. Error Clearing 93
9.5. Error Detection Time 93
10. Parameter List 94
11. Technical Specifications 97
11.1. Dimensions 99
12. Certificate 100

1. Safety Instructions and Responsibility

1.1. General Safety Instructions

This operation manual is a significant component of the unit and includes important rules and hints about the installation, function and usage. Non-observance can result in damage and/or impairment of the functions to the unit or the machine or even in injury to persons using the equipment!

Please read the following instructions carefully before operating the device and observe all safety and warning instructions! Keep the manual for later use.

A pertinent qualification of the respective staff is a fundamental requirement in order to use these manual. The unit must be installed, connected and put into operation by a qualified electrician.

Liability exclusion: The manufacturer is not liable for personal injury and/or damage to property and for consequential damage, due to incorrect handling, installation and operation. Further claims, due to errors in the operation manual as well as misinterpretations are excluded from liability.

In addition the manufacturer reserves the right to modify the hardware, software or operation manual at any time and without prior notice. Therefore, there might be minor differences between the unit and the descriptions in operation manual.

The raiser respectively positioner is exclusively responsible for the safety of the system and equipment where the unit will be integrated.

During installation or maintenance all general and also all country- and application-specific safety rules and standards must be observed.

If the device is used in processes, where a failure or faulty operation could damage the system or injure persons, appropriate precautions to avoid such consequences must be taken.

1.2. Use according to the intended purpose

The unit is intended exclusively for use in industrial machines, constructions and systems. Non-conforming usage does not correspond to the provisions and lies within the sole responsibility of the user. The manufacturer is not liable for damages which are arisen through unsuitable and improper use. Please note that device may only be installed in proper form and used in a technically perfect condition in accordance to the technical specifications (see chapter 11). The device is not suitable for operation in explosion-proof areas or areas which are excluded by the EN 61010-1 standard.

1.3. Installation

The device is only allowed to be installed and operated within the permissible temperature range. Please ensure adequate ventilation and avoid all direct contact between the device and hot or aggressive gases and liquids.

Before installation or maintenance, the unit must be disconnected from all voltage-sources. Further it must be ensured that no danger can arise by touching the disconnected voltage-sources.

Devices which are supplied by AC-voltages, must be connected exclusively by switches, respectively circuit-breakers with the low voltage network. The switch or circuit-breaker must be placed as near as possible to the device and further indicated as separator.

Incoming as well as outgoing wires and wires for extra low voltages (ELV) must be separated from dangerous electrical cables (SELV circuits) by using double resp. increased isolation.

All selected wires and isolations must be conforming to the provided voltage- and temperature-ranges. Further all country- and application-specific standards, which are relevant for structure, form and quality of the wires, must be ensured. Indications about the permissible wire cross-sections for wiring are described in the technical specifications (see chapter 11).

Before first start-up it must be ensured that all connections and wires are firmly seated and secured in the screw terminals. All (inclusively unused) terminals must be fastened by turning the relevant screws clockwise up to the stop.

Overvoltage at the connections must be limited to values in accordance to the overvoltage category II.

For placement, wiring, environmental conditions as well as shielding and earthing/grounding of the supply lines the general standards of industrial automation industry and the specific shielding instructions of the manufacturer are valid. Please find all respective hints and rules on www.motrona.com/download.html --> [General EMC Rules for Wiring, Screening and Earthing].

1.4. Cleaning, Maintenance and Service Notes

To clean the front of the unit please use only a slightly damp (not wet!), soft cloth. For the rear no cleaning is necessary. For an unscheduled, individual cleaning of the rear the maintenance staff or assembler is self-responsible.

During normal operation no maintenance is necessary. In case of unexpected problems, failures or malfunctions the device must be shipped for back to the manufacturer for checking, adjustment or reparation. Unauthorized opening and repairing can have negative effects or failures to the protection-measures of the unit.

2. Introduction

This series of speed monitors is suitable for safety-related monitor tasks e. g. over-speed, under-speed, standstill and direction of rotation. This SIL3/PLe certified generation of devices was developed to achieve functional safety by supporting a wide range of sensors and encoders in different combinations.

Due to its innovative multifunctional inputs these devices are perfectly suitable for the retrofitting of existing plants and machines which are using “non-safe“ sensors. This offers a great opportunity to save costs for expensive and certified sensors. Also the costs for new installations and adjustments can be reduced significantly by using the existing components and wiring.

Typical examples are centrifuges, cranes, wind power or hauling plants.

Special features:

- Additionally suitable for a "Set-Up Operation",
  e. g. for manual settings at plants with open doors and reduced speed
- All models are safety-related and dually certified according to
  EN 61508, EN 62061 / SIL3 and EN ISO 13849-1 Cat. 3 / Ple,
  even when using “non-safety-related” standard sensors or encoders
- Wide input frequency range and fast response time
- Very versatile range of possible monitoring functions
- Easy setup by PC via USB or by the optional programming module BG230

3. Available Models

D S 2 x x

Unit	
D =	Speed Monitor

Application	
S =	Safety Applications

Housing	
2 =	Housing for DIN rail mounting into a control cabinet (according to EN 60715)

Inputs	
3 =	2 Inputs for SinCos encoders 2 Inputs for incremental RS422 encoders 2 Inputs for HTL/PNP incremental encoders or HTL/PNP control signals
4 =	1 Input for SinCos encoder with SIL3 / PLe 2 Inputs for HTL/PNP control signals

Outputs	
0 =	1 Relay Output 1 Analog Output 4 Control Outputs 1 SinCos Splitter Output 1 RS422 Splitter Output
6 =	1 Relay Output 1 Analog Output 4 HTL Control Outputs

4. Block Diagrams and Connections

4.1. DS230 Block Diagram

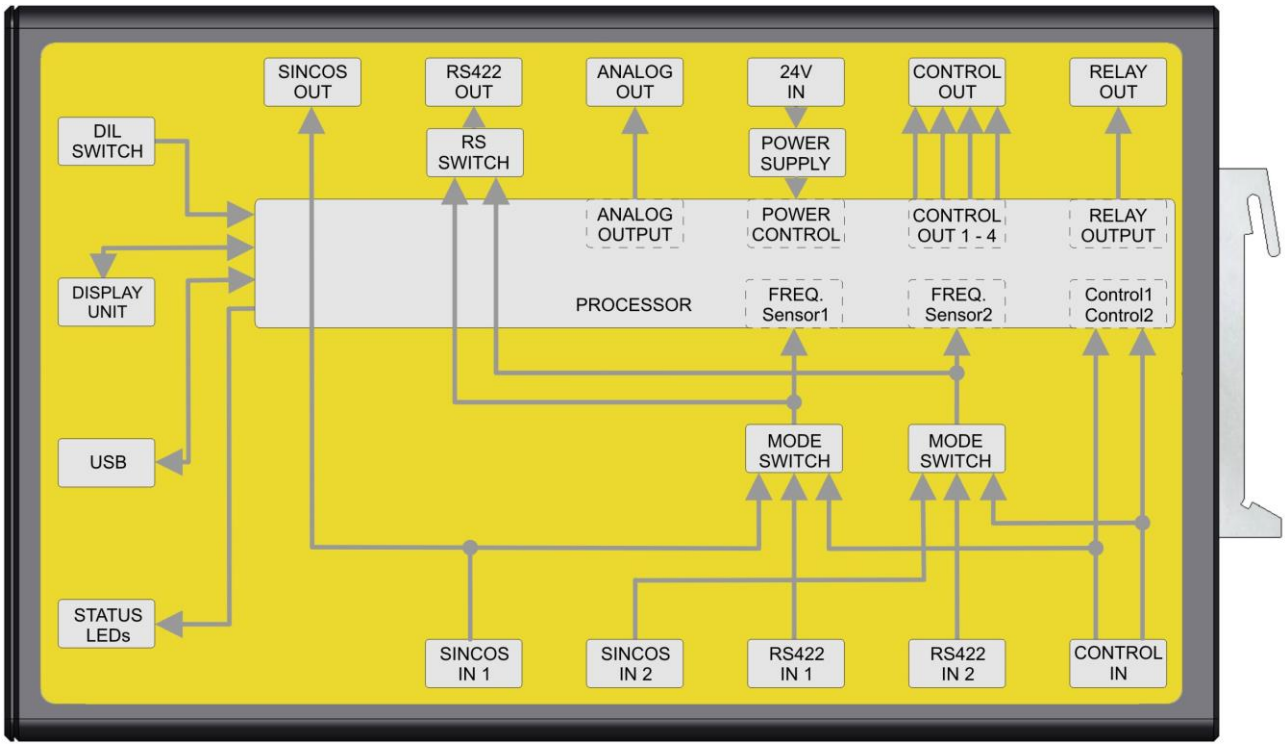

4.2. DS230 Connections

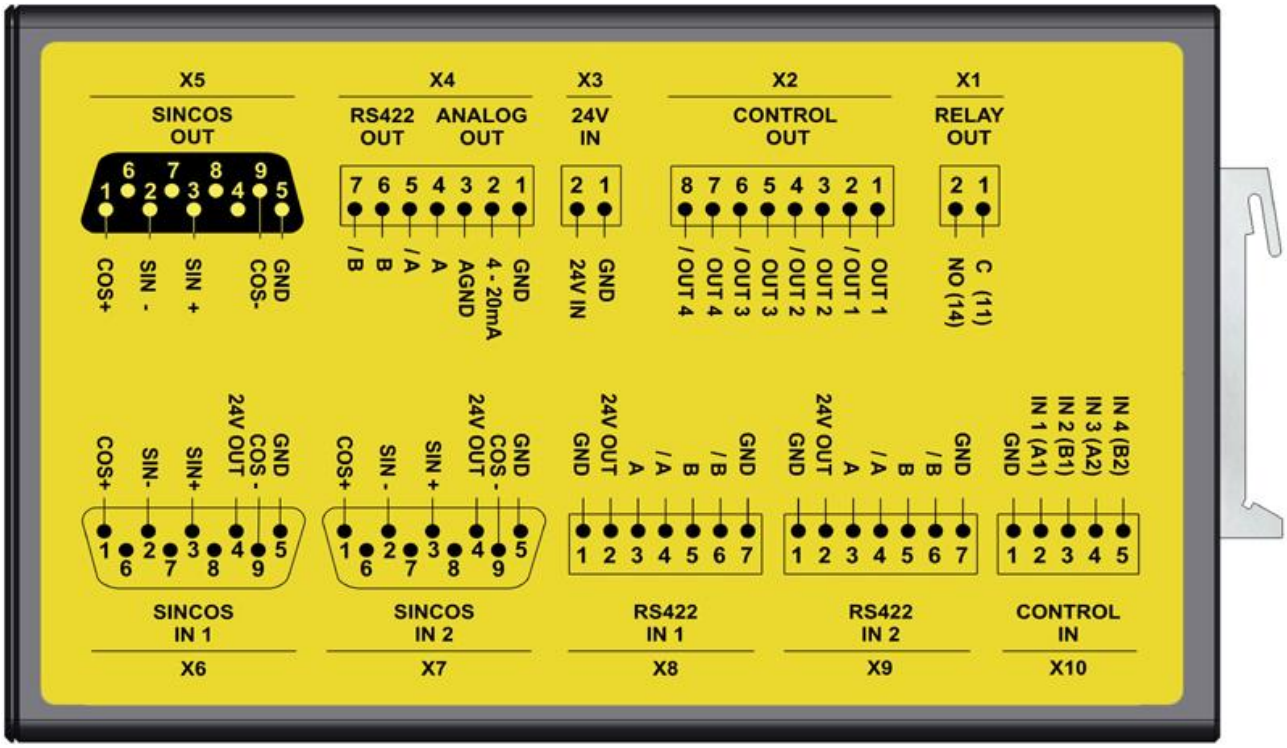

4.3. DS236 Block Diagram

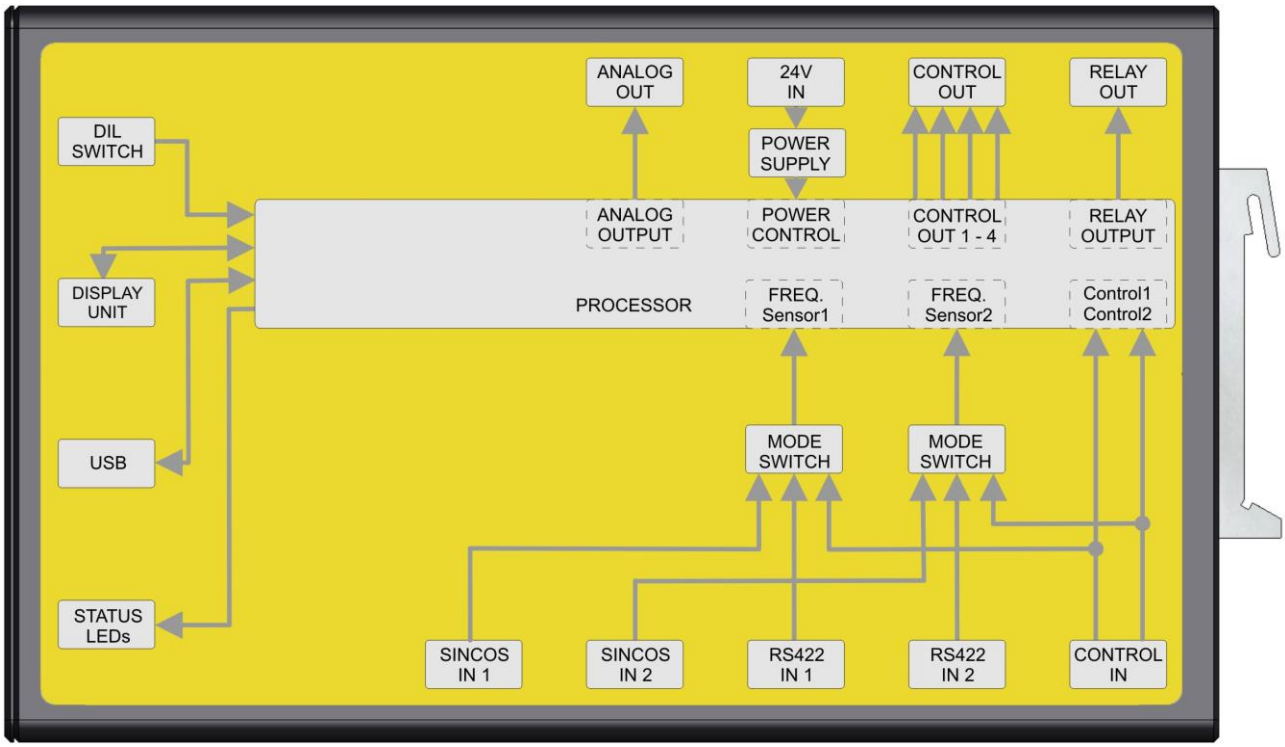

4.4. DS236 Connections

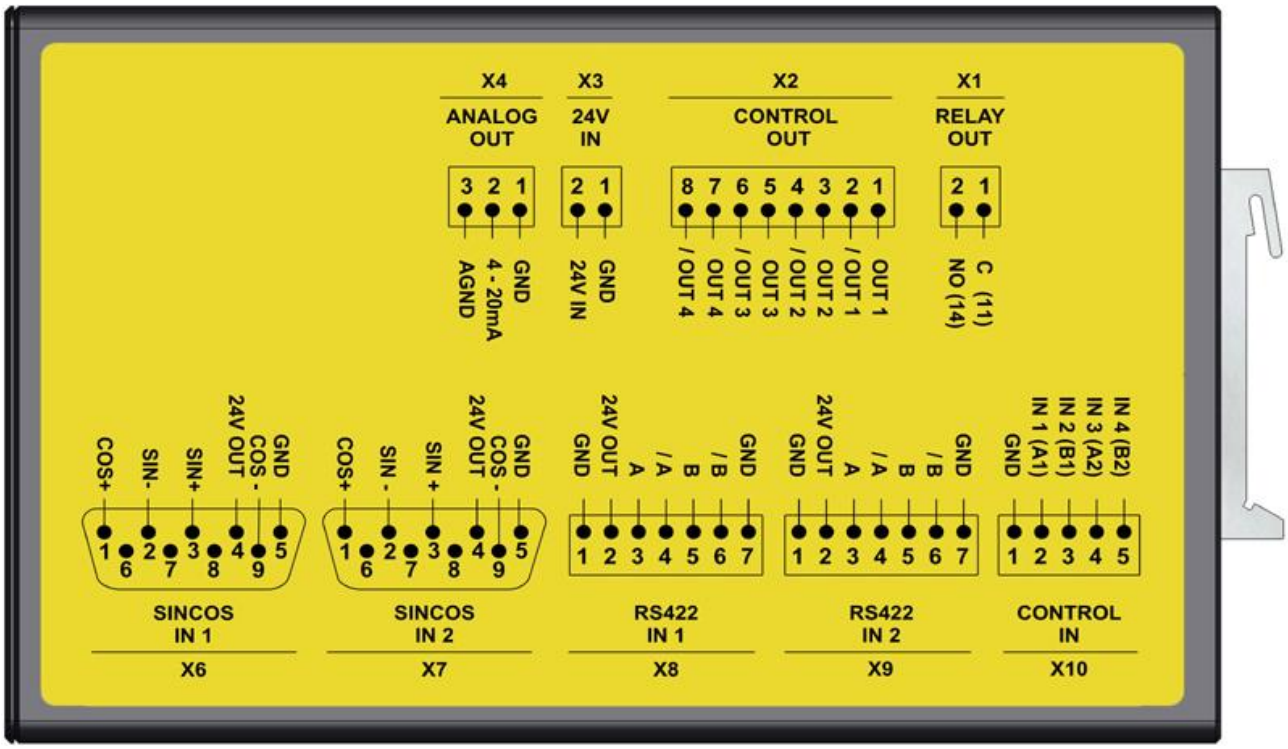

4.5. DS240 Block Diagram

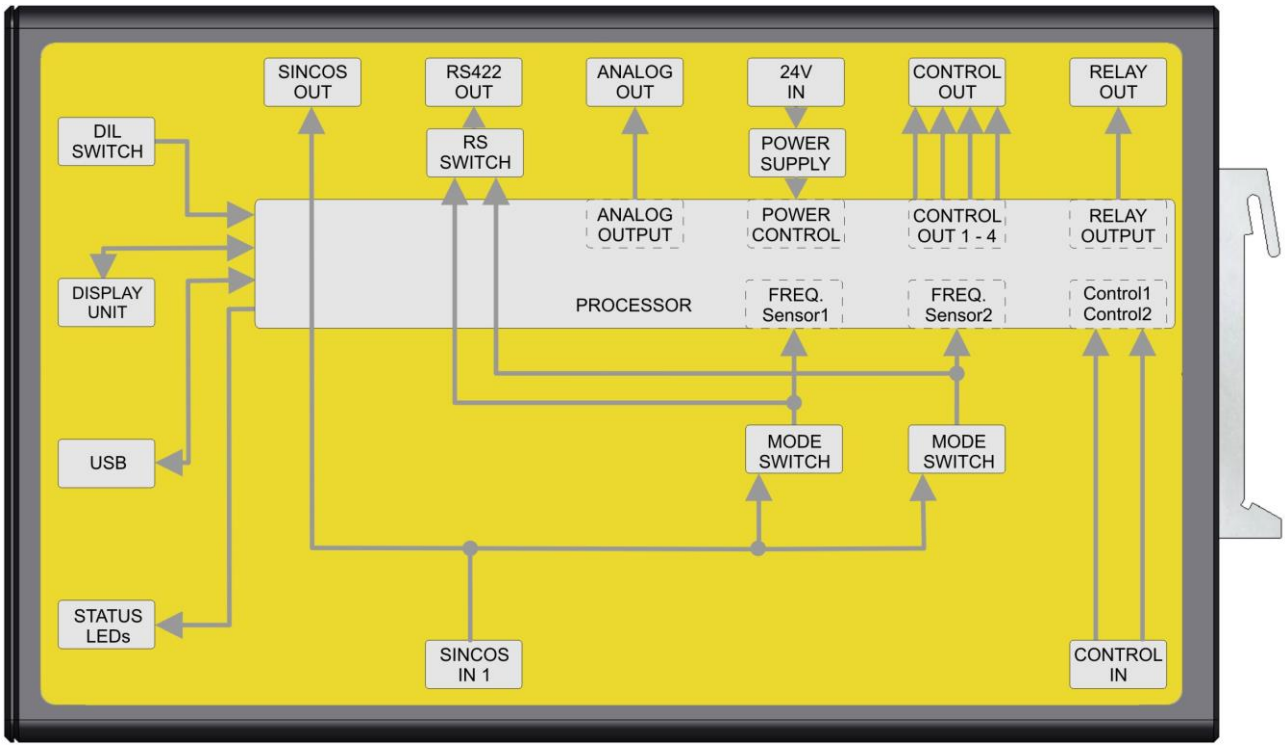

4.6. DS240 Connections

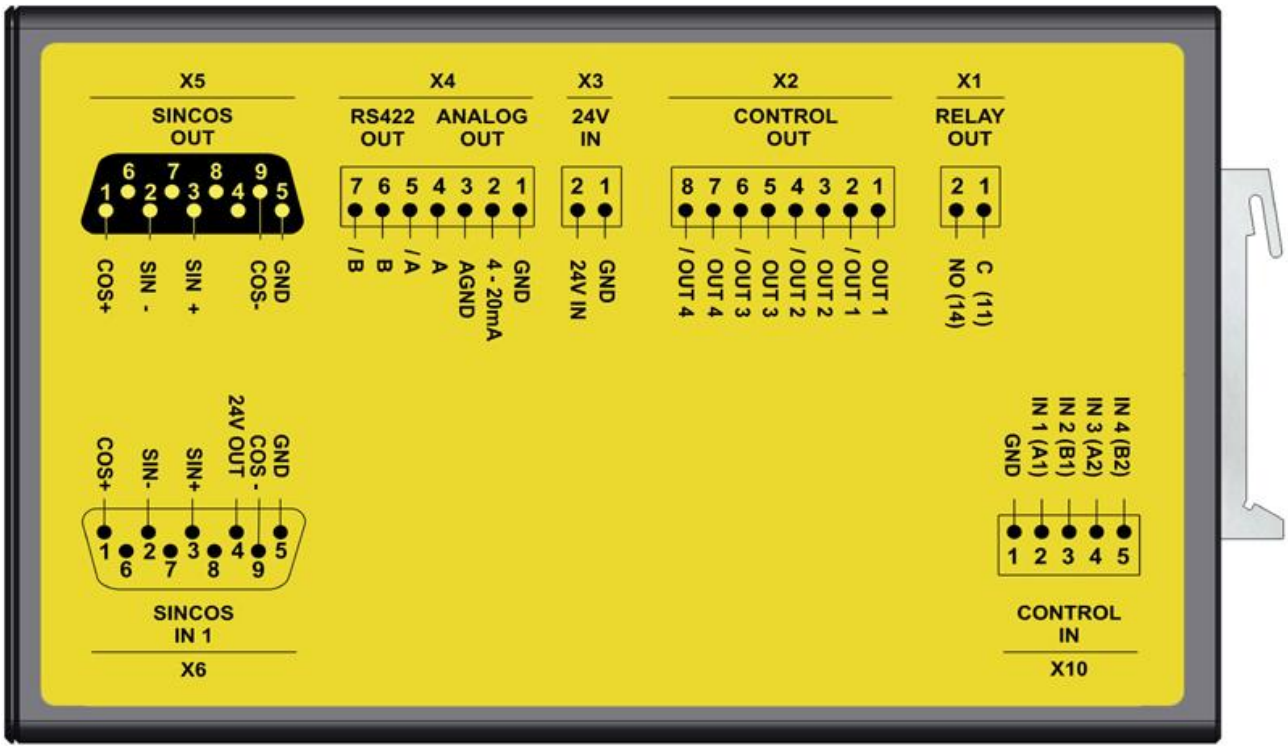

4.7. DS246 Block Diagram

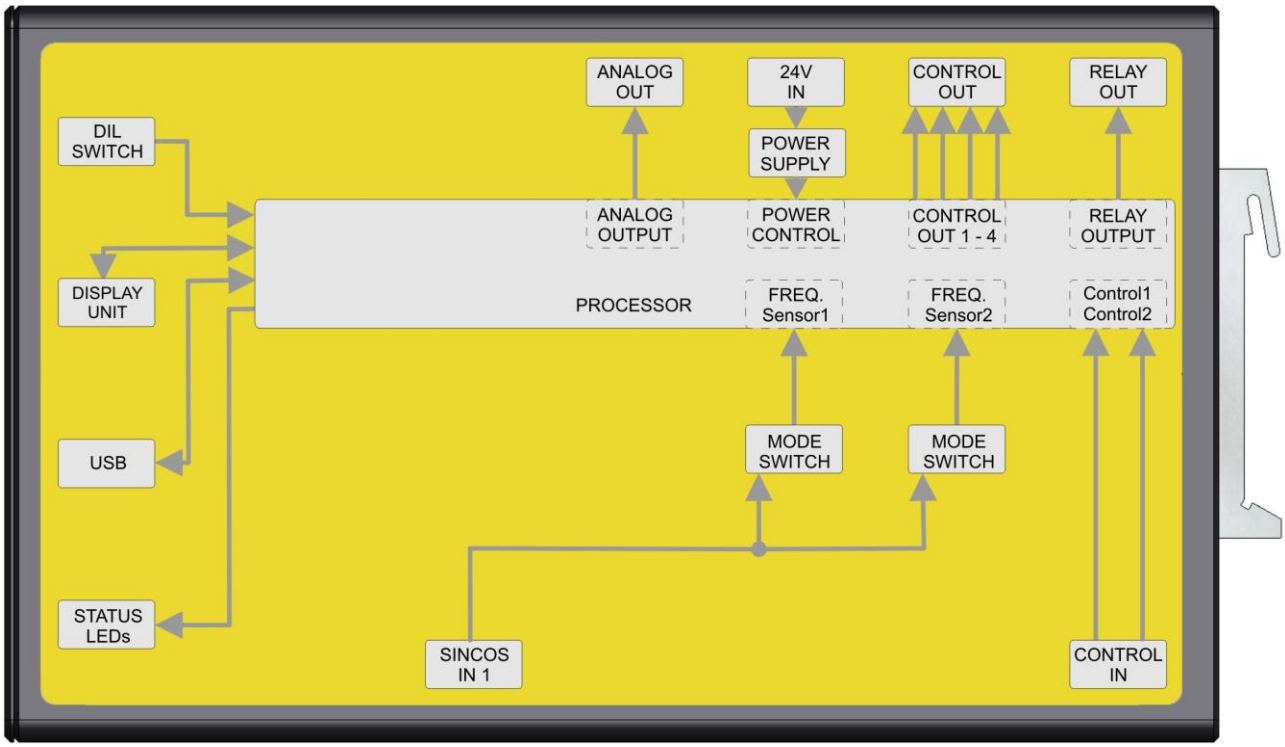

4.8. DS246 Connections

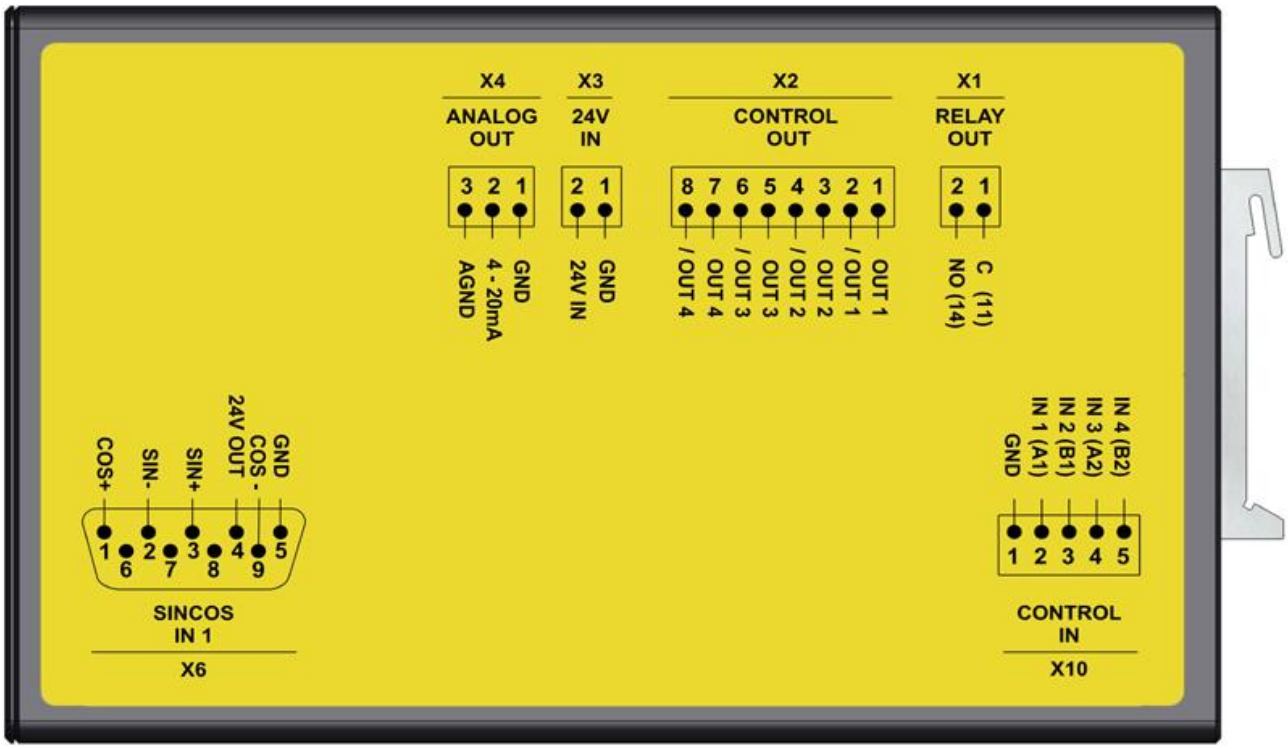

5. Description of Connections

This chapter describes only the electrical connections and their general function. For a detailed technical information please refer the chapter 11.

Name	Description see chapter
X1 | RELAY OUT	5.10 Relay-Output
X2 | CONTROL OUT	5.9 Control-Outputs
X3 | 24V IN	5.1 Power Supply
X4 | ANALOG OUT	5.8 Analog-Output 4 to 20 mA
X4 | RS 422 OUT	5.7 RS422-Splitter-Output
X5 | SINCOS OUT	5.6 SinCos-Splitter-Output
X6 | SINCOS IN 1	5.3 SinCos-Inputs
X7 | SINCOS IN 2	5.3 SinCos-Inputs
X8 | RS422 IN 1	5.4 RS422-Inputs
X9 | RS422 IN 2	5.4 RS422-Inputs
X10 | CONTROL IN	5.5 HTL / Control Inputs
X11	5.12 Interface for Display Unit BG230
X12	5.13 USB Interface for the OS6.0 Operator Surface
S1	5.11 DIL switch
ERROR - ON	5.14 LEDs / Status Indication

All outputs perform safe. The connection to the outputs is only safe if the sequential device is able to detect the fault status of each output.

In order to prevent simultaneous damages to the cables by external influences, the encoder resp. sensor lines must be kept physically separate from one another.

5.1. Power Supply

If the unit is connected to a DC power supply network, which supplies further devices or systems, it must be ensured that no voltages ≥ 60 V can occur at the terminals X3:1 and X3:2.

If this cannot be ensured, the unit must be supplied by a separate DC power pack, which may not be connected to further devices or systems.

The requirements for both kinds of power supply are:

- Nominal voltage range from 18 … 30 VDC
- Ripple < 10% @ 24 V
- External fuse (2.5 A, medium time lag) required

A separate power pack must cover the following requirements:

- The switch-on current of the unit is maximum 2.5 A
- The consumption of the unit is maximum 45 W

The 18 … 30 VDC power supply must be connected by the pluggable 2-pin screw terminal [X3].
The power supply input is protected by an internal reverse polarity protection.

pluggable 2-pin screw terminal [X3]

- The input must be protected by an external fuse
  (type and value see chapter 11. "Technical Specifications").
- A SIL3 certified power supply can be used without any further external components or protections.

5.2. Encoder Supply

The unit offers an auxiliary voltage output to power the used encoder resp. sensors.
The power supply of the encoders must be carried out directly from the safety unit (see chapter 5.2.1) or in use of an external power supply via a relay (see chapter 5.2.2).

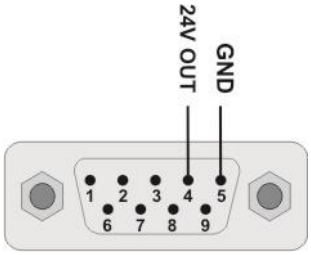

Encoder supply: SinCos inputs [X6] [X7]

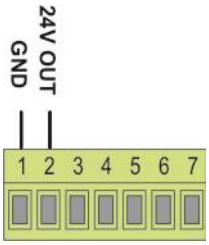

Encoder supply: RS422 inputs [X8] [X9]
HTL encoders or sensors must also be connected to the encoder supply of the RS422 inputs

The maximum load of encoder supply is 200 mA each channel (Sensor1 and Sensor2).

Supply	SinCos inputs	RS422 inputs	HTL inputs
Sensor1	[X6:4] [X6:5]	[X8:1] [X8:2]	[X8:1] [X8:2]
Sensor2	[X7:4] [X7:5]	[X9:1] [X9:2]	[X9:1] [X9:2]

Examples for the connection of encoders and the encoder supply can be found in chapter 6.

When powering up the encoder supply, the maximum input current of the safety unit can be exceeded due to different encoders. In this case, the encoder supply will not be enabled and an error appears (see chapter 9).

In case of such problems or if another voltage level is required, the encoder supply can be switched via a relay by an external voltage source. The relay activation must essentially be performed by the encoder supply of safety unit (see chapter 5.2.2).

- In case of a direct encoder supply it is mandatory to operate the encoders with the auxiliary voltage from the unit.
- An external encoder supply must be done in each case via a relay which is triggered by the auxiliary voltage of the unit.

5.2.1. Direct Encoder Supply

The unit provides an auxiliary encoder supply for each sensor channel
(HTL encoders must be supplied by the encoder supply for the RS422 inputs).

The level of the supply voltage is approximate 2 V below the 18 … 30 VDC power supply at terminal [X3].

The maximum load of encoder supply is 200 mA each channel (Sensor1 and Sensor2).

Supply	SinCos inputs	RS422 inputs	HTL inputs
Sensor1	[X6:4] [X6:5]	[X8:1] [X8:2]	[X8:1] [X8:2]
Sensor2	[X7:4] [X7:5]	[X9:1] [X9:2]	[X9:1] [X9:2]

Example of a direct encoder supply

- In case of a direct encoder supply it is mandatory to supply the encoders with the auxiliary voltage from the unit.

5.2.2. External Encoder Supply

An external encoder supply must be done in each case via a relay which is triggered by the auxiliary voltage of the unit. This is necessary, because the encoder supply will only be activated after the safety unit has successfully completed its initialization and self-test.

In case of a relay failure or a failure of the external encoder voltage (switched by the relay), the operator must ensure that the plant cannot reach a safety-critical state.

Explanation / Solution:

In case of an encoder supply failure the encoder would "rotate", but the unit is incapable to detect speed or speed differences. In order to detect this error, the operator can use e. g. a control output of the unit which indicates "standstill" (see Section 7.4.6). A master controller has to compare these two states (plant "rotate" and control output "standstill"). If the two states differ the master controller has to trigger an error and the plant has to go to a safe state.

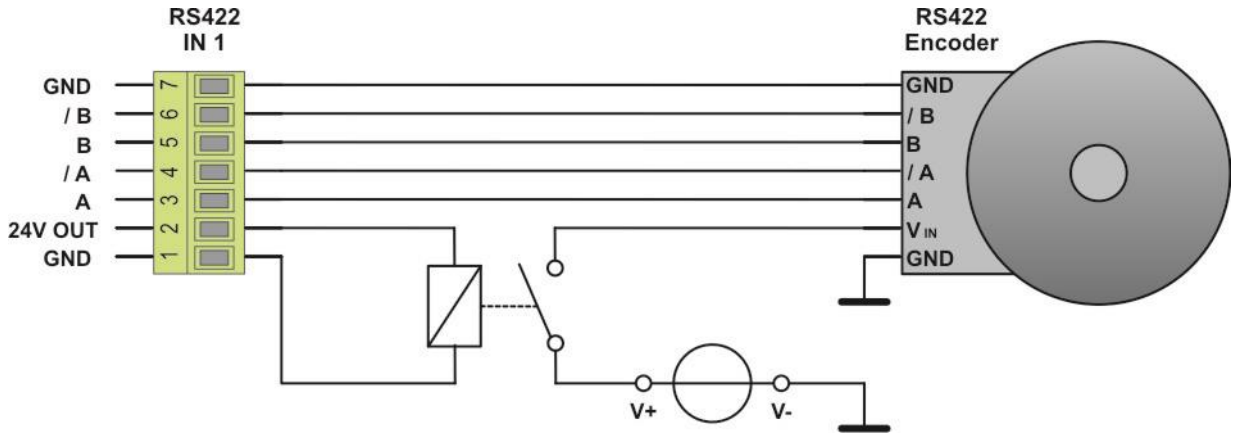

Example of an external encoder supply (1 encoder is switched via 1 relay)

- An external encoder supply must be done in each case via a relay which is triggered by the auxiliary voltage of the unit.
- The operator must ensure that the plant cannot reach a safety-critical state, in case of a failure of the relay or a failure of the external encoder voltage (switched by the relay).

Continuation “External Encoder Supply”

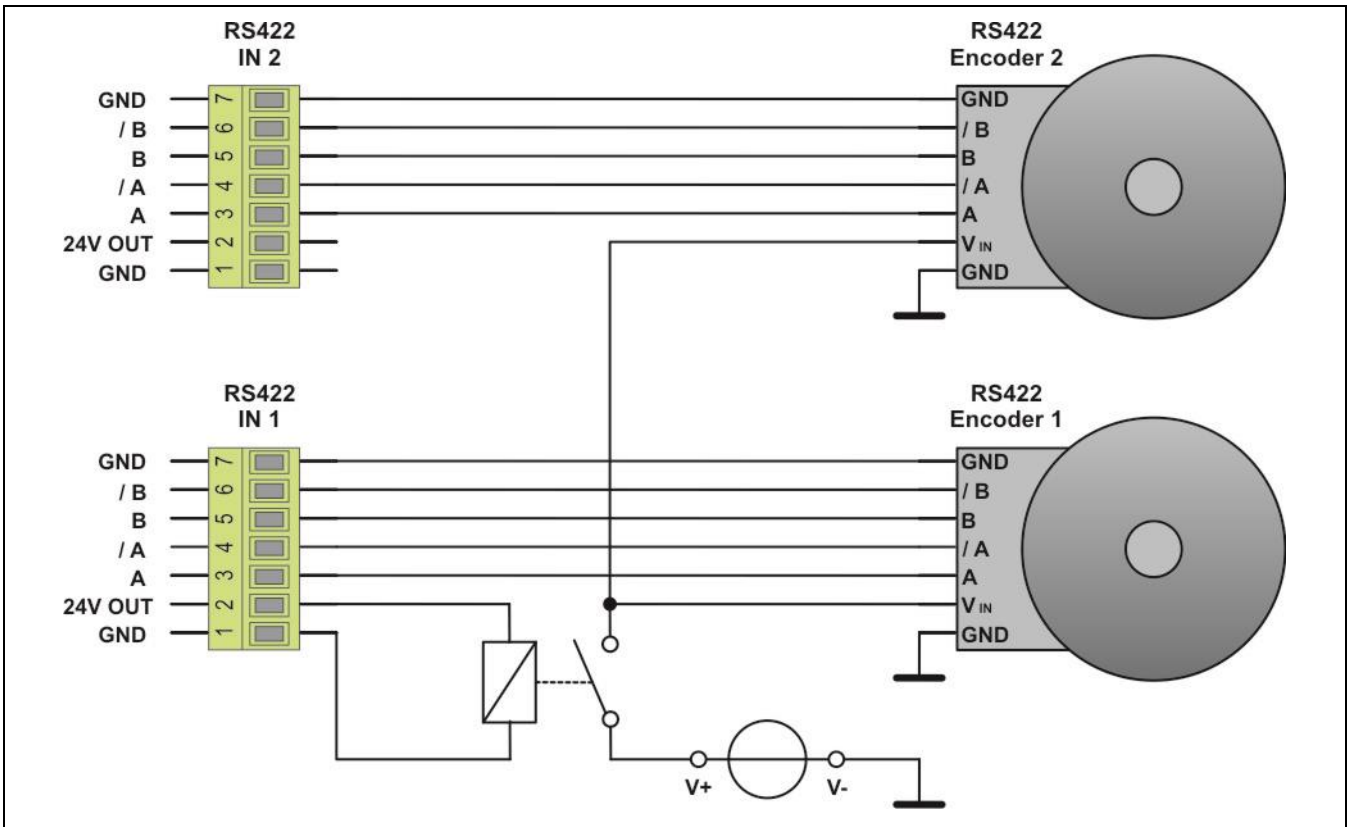

Example of an external encoder supply (2 encoders are switched via 1 relay)

- An external encoder supply must be done in each case via a relay which is triggered by the auxiliary voltage of the unit.
- The operator must ensure that the plant cannot reach a safety-critical state, in case of a failure of the relay or a failure of the external encoder voltage (switched by the relay).

5.3. SinCos-Inputs

If the operational mode is set for using SinCos encoders (see chapter 7.4.1 / Parameter 000), the unit will accept SinCos input signals with 1 Vpp and 2.5 V DC-offset at the 9-pin SUB-D connectors [X6] and [X7].

It is mandatory to connect up always all existing signal lines (SIN+, SIN-, COS+ and COS-). The internal SinCos encoder signal monitor verifies the Common Mode range of each signal line and is capable to detect cable fractures.

An evaluation option for any existing reference signals (REF+ and REF-) is not applicable.

All input lines are already terminated by internal 120 Ohm load resistors.

The SinCos encoder must use the corresponding encoder supply at pin 4 and pin 5 of the connector (see chapter 5.2).

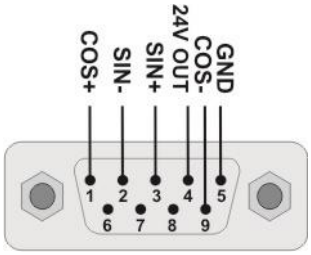

male SUB-D connector [X6], [X7]

5.4. RS422-Inputs

(Only DS230 and DS236)

If the operational mode (see chapter 7.4.1 / Parameter 000) is set for RS422 encoder use, the unit will accept differential input signals from an incremental encoder in RS422 format at the terminal strips [X8] and [X9]. The RS422 input channels (A and /A resp. B and /B) are internally terminated by a dynamic terminating circuit (220 pF / 120 ohm).

It is mandatory to connect up all signal lines (A, /A, B and /B).

An evaluation option for any existing zero pulses (or Z / Z) does not exist.

The RS422 encoder must use the encoder supply at pin 1 and 2 of the respective terminal (see chapter 5.2).

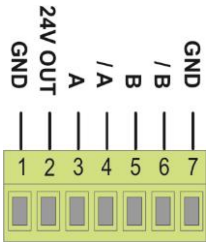

pluggable 7-pin screw terminal [X8], [X9]

5.5. HTL / Control Inputs

The screw terminal [X10 | CONTROL IN] has two inputs for signals with HTL level and PNP switching characteristic. Each of the inputs performs complementary.

Depending on the operational mode (see chapter 7.4.1 / Parameter 000), the control inputs [X10 | CONTROL IN] can be configured as frequency or as command inputs:

Frequency input for HTL encoders (A / B / 90°):

Sensor1	[X10 | CONTROL IN]	incremental HTL encoder	[X10:2] [X10:3]	channel A channel B
Sensor2	[X10 | CONTROL IN]	incremental HTL encoder	[X10:4] [X10:5]	channel A channel B

HTL encoders must be supplied by the encoder supply of the RS422 inputs (chapter 5.2.).

Frequency input for HTL encoders (A) or a proximity switch:

Sensor1	[X10 | CONTROL IN]	incremental HTL encoder	[X10:2] [X10:3]	channel A unconnected / direction signal
Sensor2	[X10 | CONTROL IN]	incremental HTL encoder	[X10:4] [X10:5]	channel A unconnected / direction signal

e. g. to evaluate a gear wheel by connecting a proximity switch.

The inputs [X10:3] resp. [X10:5] may be unconnected (internal pull-down) or can be used for a static direction signal. HTL encoders must be supplied by the encoder supply of the RS422 inputs (see 5.2).

Control input for HTL commands:

Control1	[X10 | CONTROL IN]	HTL/PNP control signal	[X10:2] [X10:3]	direct control signal complementary control signal
Control2	[X10 | CONTROL IN]	HTL/PNP control signal	[X10:4] [X10:5]	direct control signal complementary control signal

Basically always the complementary signal of the direct input must be applied to the inverted input. Any other conditions are invalid and are detected as an error by the unit.

For more information about the control inputs see chapter 7.4.7.

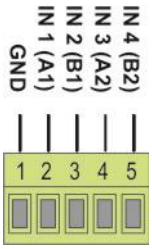

pluggable 5-pin screw terminal [X10]

- It does not make sense to configure the unit for a connection of 2 HTL encoders simultaneously, because then no more inputs for external commands are available.
- With DS24x units, the HTL/PNP inputs can only be used as control-inputs for external commands.

5.6. SinCos-Splitter-Output

(only DS230 and DS240)

The DS230 respective the DS240 has a safety-related SinCos-Splitter-Output. Depending on the selected operating mode (0, 1, 2 or 6), the integrated splitter function allows to reproduce the signal at input terminal [X6 | SINCOS IN 1] to the female 9-pin SUB-D connector [X5 | SINCOS OUT]. Thus the encoder signal connected to [X6 | SINCOS IN 1] can be processed by a further target device.

The signal delay time between SinCos input and SinCos output is approximately 200 ns.

The channels SIN+ and SIN- resp. COS+ and COS- must be terminated by 120 Ohm load resistors at the target device.

In case of errors, the DC-offset of the SinCos output is shifted in order to signalize the error condition to the target device.

The connection to the SinCos splitter output is only safe, if the following device includes a SinCos monitoring system and can detect the offset error.

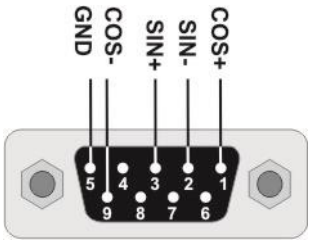

female SUB-D Connector [X5]

- The channels SIN+ and SIN- resp. COS+ and COS- must be terminated by 120 Ohm load resistors at the target device.

5.7. RS422-Splitter-Output

(only DS230 and DS240)

The DS230 respective the DS240 has a safety-related RS422-Splitter-Output. Depending on the selected operating mode, the integrated splitter function allows to reproduce an input frequency to the output terminal X4 | RS422 OUT. Thereby the RS422 signal can be processed by a further device. The block diagrams (see chapter 4) give an overview.

The device evaluates two frequency channels. Which input is assigned to which channel is set in the operating mode (see chapter 7.4.1 / Parameter 000). The splitter output allows to reproduce the input frequency from one of these channels (see chapter 7.4.9).

Independent from the input signal (SinCos resp. HTL), always incremental RS422 square-wave pulses are generated at [X4 | RS422 OUT].

The signal delay time between the RS422 input and the RS422 output is approximately 600 ns.

In case of an error, no more incremental signals are available at the RS422 output (Tri-State with pull-down cut off).

The connection to the RS422 Splitter output is only safe if the following device is capable to detect the error state of the safety unit.

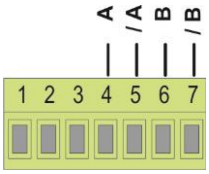

pluggable 7-pin screw terminal [X4]

In DS230 / DS240 versions, the screw terminal [X4] is provided with 7 connections:

[X4 | ANALOG OUT]	analog output	[X4:1-3]
[X4 | RS422 OUT]	RS422 output	[X4:4-7]

In DS236 / DS246 versions, the screw terminal [X4] has only 3 connections:

[X4 | ANALOG OUT]	analog output	[X4:1-3]
[X4 | RS422 OUT]	not available!	

With DS240 variants only the encoder frequency connected at input terminal [X6 | SINCOS IN 1] can be exported to the RS422 splitter output.

5.8. Analog-Output 4 to 20 mA

One safety-related analog output is available at the screw terminal [X4]. The current output is freely scalable (see chapter 7.4.10). It delivers an output signal, which is proportional to one of the input frequency (see chapter 7.4.1 / Parameter 003) and independent from the connected sensor types. In case of an unused analog output [X4:2] and [X4:3] must be linked. An open analog output (e.g. wire fracture) will release an error status.

During normal operation, the output moves in a proportional range from 4 to 20 mA.

In case of errors, the analog output is 0 mA.

The connection to the Analog-Output is only safe if the following device is capable to detect the error state of the safety unit. In case of errors the operator is responsible to ensure safety conditions to all system-parts and -components which are influenced by the analog output.

In DS230 / DS240 versions, the screw terminal [X4] is provided with 7 connections:

[X4 | ANALOG OUT]	analog output	[X4:1-3]
[X4 | RS422 OUT]	RS422 output	[X4:4-7]

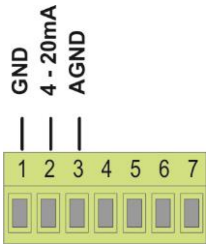

pluggable 7-pin screw terminal [X4] at DS230/DS240

In DS236 / DS246 versions, the screw terminal [X4] has only 3 connections:

[X4 | ANALOG OUT]	analog output	[X4:1-3]
[X4 | RS422 OUT]	not available!	

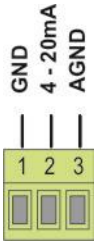

pluggable 3-pin screw terminal [X4] at DS236/DS246

- In case of an unused analog output [X4:2] and [X4:3] must be linked.
- An open analog output (e.g. wire fracture) will release an error status.

5.9. Control-Outputs

Four safety-related HTL control outputs are available at the screw terminal [X2 | CONTROL OUT]. Each of the output performs complementary (OUT1, /OUT1 to OUT4, /OUT4).

The switching points and conditions are adjustable by Parameters (see chapter 7.4.5 and 7.4.6)

In normal state (no error, no switching conditions active) the non-inverted outputs offers LOW level and the inverted outputs offers HIGH level. During HIGH state, the output level is about 2 V below the supply voltage connected to terminal [X3 | 24V IN]. Each output has a push-pull output stage and short circuit protection. When switching inductive loads, additional external suppression measures are recommended.

In case of errors all outputs are LOW (no more inversion between Out_ and /Out_).

The connection to the Analog-Output is only safe if the following device is capable to detect the error state of the safety unit.

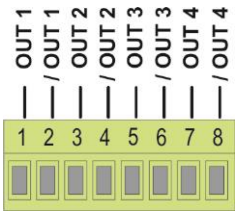

pluggable 8-pin screw terminal [X2]

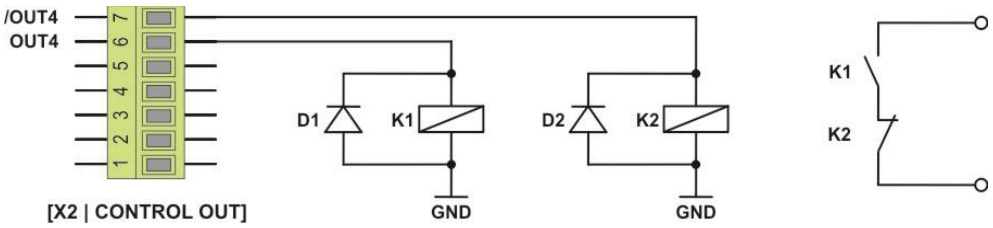

Example: Control-Output with inductive load (Relay)
OUT4 and /OUT4 safety-related wired

Example: Control-Outputs to PLC
OUT4 und /OUT4 safety-related wired
OUT3 not safety-related wired

5.10. Relay-Output

The safety-related relay-output consists of two independent relays with force guided contacts. The normally open contacts of the two relays (NO) are internally connected in series. At the 2-pin screw terminal [X1 | RELAY OUT] the series-relay-contact can be tapped for integration into a safety circuit.

The contacts are only closed during normal and disturbance-free operation. They will open to its safety state in case of errors or when the programmed switching condition (see chapter 7.4.5) is fulfilled. In a de-energized state of the unit, the contacts are also open.

The switching points and conditions of the relay-output are freely programmable by parameters (see chapter 7.4.5 and 7.4.6). Further the "opener" is also integrated within all monitoring functions.

In case of an error, the contact changes to its open and safe condition.

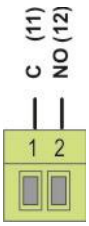

pluggable 2-pin screw terminal [X1]

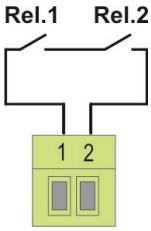

internal connection [X1]

- In case of an open relay-contact, the operator is responsible to ensure a safe state to all relevant parts and components of the equipment.
- The target unit must be able to evaluate edges, in order to determine dynamical conditions of the relay output too.
- At frequencies close to the switching point, relay bouncing may occur through the variance of the frequency measurement. To prevent this effect, a hysteresis should be set (see parameter 053).
- If short oversteps of the switching point should be detected, a lock output should be set (see parameter 057)

5.11. DIL switch

The 3-position DIL switch [S1] is located at the front of the unit
(only accessible, if no display-unit is connected).

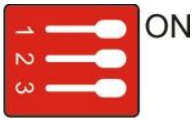

3-pos DIL switch [S1]

The following unit-states can be set by the DIL switch:

Slider	Condition	Unit-State
1	ON	„Normal Operation“ - Parameter access disabled
	OFF	„Factory Settings“ - with next power-on, all Parameters will be reset to default values
2	ON	„Normal Operation“ - Parameter access disabled
	OFF	„Self Test Message“ - with next power-on, the unit will transmit a self test protocol via USB interface (without “Self Test Message” booting of the start up is faster)
3	ON	„Normal Operation“ - Parameter access disabled
	OFF	„Programming Mode“ – allows access to the Parameters (by display unit or PC)

- „Programming Mode“ (DIL switch) only for start-up
- Set all DIL switch sliders to „ON“ after start-up
- Protect the DIL switch sliders after start-up (e. g. by covering with an adhesive tape)
- Normal operation is only permitted when the yellow LED is permanently off
- The safety function of the unit cannot be guaranteed before the commissioning is completed.

5.11.1. Boot time

DIL Nr. 2	Boot time
ON = Normal Operation	After connecting the supply voltage, the device is ready for operation after about 2 s
OFF = Self Test Message	After connecting the supply voltage, the device is ready for operation after about 8 s

5.12. Interface for Display Unit BG230

The serial interface serves for communication between the unit and an optional programming- and display unit „BG320“, which can be plugged on the front.

8-pin female connector [X11]

The programming and display unit BG230 and the safety unit will be connected by plugging the BG230 on the female 8-pin connector [X11] at the front.

5.13. USB Interface for the OS6.0 Operator Surface

For communication between the unit and a PC or a super ordinate controller, a serial interface simulation is accessible at the USB port. For connection a standard USB-cable with a „Type B“ connector is used. The USB cable is available as an option.

USB type B

The installation procedure of the USB driver file is described in the following document:
“Installation USB diver”

5.14. LEDs / Status Indication

Two status LEDs are located at the front of the unit. The green one is marked as [ON] and the yellow one as [ERROR].

Status LEDs

The green status LED uses the following two conditions:

LED (green)	Condition
OFF	Power off - no power supply voltage
ON	Power on - power supply voltage is ok

The yellow status LED uses the following four conditions:

LED (yellow)	Condition
OFF	Normal operation, self-test successfully completed, no error messages
ON	After power on: the unit is running up, self-test in progress
	During normal operation: error released by the process (divergence of frequencies etc.)
SLOW	DIL1 = OFF: unit-state „Factory Settings“
	DIL3 = OFF: unit-state „Programming Mode“
FAST	Error: incorrect self-test or internal error (see chapter 9. Error Detection)

OFF = LED if off, ON = LED is lighting
SLOW = slow flashing (approx. 1 Hz), FAST = fast flashing (approx. 2.5 Hz)

- „Programming Mode“ (DIL switch) only for start-up
- Set all (DIL switch) sliders to „ON“ after start-up
- Protect the (DIL switch) sliders after start-up (e. g. by covering with an adhesive tape)
- Normal operation is only permitted when the yellow LED is permanently off
- The safety function of the unit cannot be guaranteed before the commissioning is completed.

6. Operational Modes

6.1. Operational Modes of DS23x types

The operational modes can be specified in the Main Menu (see chapter 8.4.1 / Parameter 000).

Mode	Sensor1	Sensor2	Control1	Control2
0	SinCos encoder at [X6 | SINCOS IN 1]	SinCos encoder at [X7 | SINCOS IN 2]	available for control signals	available for control signals
1	SinCos encoder at [X6 | SINCOS IN 1]	HTL encoder (A, B, 90°) [X10 | CONTROL IN]	available for control signals	Not available!
2	SinCos encoder at [X6 | SINCOS IN 1]	HTL encoder (A) at [X10 | CONTROL IN]	available for control signals	Not available!
3	HTL encoder (A, B, 90°) [X10 | CONTROL IN]	HTL encoder (A, B, 90°) [X10 | CONTROL IN]	Not available!	Not available!
4	HTL encoder (A, B, 90°) [X10 | CONTROL IN]	HTL encoder (A) at [X10 | CONTROL IN]	Not available!	Not available!
5	HTL encoder (A) at [X10 | CONTROL IN]	HTL encoder (A) at [X10 | CONTROL IN]	Not available!	Not available!
6	SinCos encoder at [X6 | SINCOS IN 1]	RS422 encoder at [X9 | RS422 IN 2]	available for control signals	available for control signals
7	RS422 encoder at [X8 | RS422 IN 1]	RS422 encoder at [X9 | RS422 IN 2]	available for control signals	available for control signals
8	RS422 encoder at [X8 | RS422 IN 1]	HTL encoder (A, B, 90°) [X10 | CONTROL IN]	available for control signals	Not available!
9	RS422 encoder at [X8 | RS422 IN 1]	HTL encoder (A) at [X10 | CONTROL IN]	available for control signals	Not available!

6.2. Operational Mode of DS24x types

In Case of DS24x, only “operational mode = 0” (see chapter 8.4.1 / Parameter 000) has to be used.

Mode	Sensor1	Sensor2	Control1	Control2
0	SIL3/PLe SinCos encoder [X6 | SINCOS IN 1]	Sensor1 and Sensor2 are internally bridged	available for control signals	available for control signals

6.3. Achievable Safety Levels of DS23x

To achieve a maximum of SIL3/PLe on system-level, no certificated sensors are required to fulfil the integrity of the device. When using standard sensors, only the required safety level (by complying the safety-related characteristics SFF, HFT, Type A/B, PFH, PFD resp. category, DCavg and MTTFd) and systematic safety integrity must be ensured for the entire protection circuit. Software programs (like SISTEMA) are very helpful for creating such evaluations of safety-related machine control systems according to the EN ISO 13849 norm.

Mode	Sensor1	Sensor2	Function	Achievable Safety Level
0	SinCos encoder at [X6 | SINCOS IN 1]	SinCos encoder at [X7 | SINCOS IN 2]	Speed Direction Standstill	SIL3 / PLe SIL3 / PLe SIL3 / PLe
1	SinCos encoder at [X6 | SINCOS IN 1]	HTL encoder (A, B, 90°) [X10 | CONTROL IN]	Speed Direction Standstill	SIL3 / PLe SIL3 / PLe SIL3 / PLe
2	SinCos encoder at [X6 | SINCOS IN 1]	HTL encoder (A) at [X10 | CONTROL IN]	Speed Direction Standstill	SIL3 / PLe SIL3 / PLe **** SIL3 / PLe ****
3	HTL encoder (A, B, 90°) [X10 | CONTROL IN]	HTL encoder (A, B, 90°) [X10 | CONTROL IN]	Speed Direction Standstill	SIL3 / PLe SIL3 / PLe SIL3 / PLe
4	HTL encoder (A, B, 90°) [X10 | CONTROL IN]	HTL encoder (A) at [X10 | CONTROL IN]	Speed Direction Standstill	SIL3 / PLe SIL3 / PLe **** SIL3 / PLe ****
5	HTL encoder (A) at [X10 | CONTROL IN]	HTL encoder (A) at [X10 | CONTROL IN]	Speed Direction Standstill	SIL3 / PLe SIL3 / PLe **** SIL3 / PLe ****
6	SinCos encoder at [X6 | SINCOS IN 1]	RS422 encoder at [X9 | RS422 IN 2]	Speed Direction Standstill	SIL3 / PLe SIL3 / PLe SIL3 / PLe
7	RS422 encoder at [X8 | RS422 IN 1]	RS422 encoder at [X9 | RS422 IN 2]	Speed Direction Standstill	SIL3 / PLe SIL3 / PLe SIL3 / PLe
8	RS422 encoder at [X8 | RS422 IN 1]	HTL encoder (A, B, 90°) [X10 | CONTROL IN]	Speed Direction Standstill	SIL3 / PLe SIL3 / PLe SIL3 / PLe
9	RS422 encoder at [X8 | RS422 IN 1]	HTL encoder (A) at [X10 | CONTROL IN]	Speed Direction Standstill	SIL3 / PLe SIL3 / PLe **** SIL3 / PLe ****

**** A safety level can only be achieved in these cases, if it is physically ensured that there only can be only one direction of rotary and linear movement. This can be realized for example by using a self-locking gearbox.

6.4. Achievable Safety Level of DS24x

To achieve a maximum of SIL3/PLe on system-level, a SIL3/PLe certificated sensor is required to fulfil the integrity of the device. The required safety level (by complying the safety-related characteristics SFF, HFT, Type A/B, PFH, PFD resp. category, DCavg and MTTFd) and systematic safety integrity must be ensured for the entire protection circuit.

Software programs (like SISTEMA) are very helpful for creating such evaluations of safety-related machine control systems according to the EN ISO 13849 norm.

Mode	Sensor1	Sensor2	Function	Achievable Safety Level
0	SIL3/PLe SinCos encoder [X6 | SINCOS IN 1]	Sensor1 and Sensor2 are internally bridged	Speed Direction Standstill	SIL3 / PLe SIL3 / PLe SIL3 / PLe

6.5. „Operational Mode“ = 0 (DS23x)

Mode	0		
Sensor1	[X6 | SINCOS IN 1]	SinCos encoder	(SIN+, SIN-, COS+, COS-)
Sensor2	[X7 | SINCOS IN 2]	SinCos encoder	(SIN+, SIN-, COS+, COS-)
Control1	[X10 | CONTROL IN]	HTL/PNP control signal	(complementary)
Control2	[X10 | CONTROL IN]	HTL/PNP control signal	(complementary)
Achievable Safety Level	Speed → SIL3 / PLe Direction → SIL3 / PLe Standstill → SIL3 / PLe		

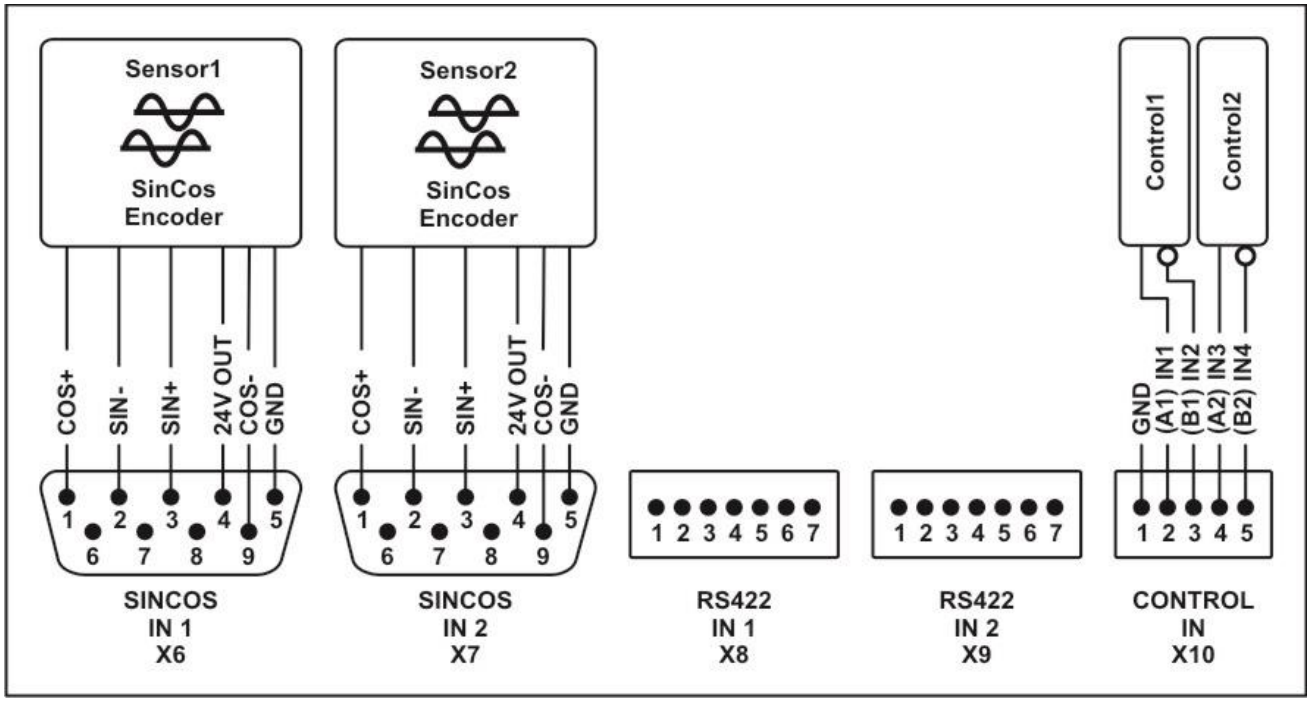

This mode (only DS23x) is used to evaluate a dual channel system, equipped with two SinCos sensors resp. Encoders, which must be performed in accordance to chapter 5.3.

- In this operational mode a DS230 variant reproduces always the input frequency at [X6 | SINCOS IN 1] to the splitter output [X5 | SINCOS OUT].
- A DS230 variant reproduces selectively the input frequency of Sensor1 or Sensor2 to the splitter output [X4 | RS422 OUT].
- The inputs at terminal [X8 | RS422 IN 1] and [X9 | RS422 IN 2] have no function.
- At terminal [X10 | CONTROL IN] the inputs Control1 and Control2 are available for control signals..

6.6. „Operational Mode“ = 0 (DS24x)

Mode	0		
Sensor1	[X6 | SINCOS IN 1]	SinCos encoder	(SIN+, SIN-, COS+, COS-)
Sensor2	Sensor1 and Sensor2 are internally bridged		
Control1	[X10 | CONTROL IN]	HTL/PNP control signal	(complementary)
Control2	[X10 | CONTROL IN]	HTL/PNP control signal	(complementary)
Achievable Safety Level	Speed → SIL3 / PLe Direction → SIL3 / PLe Standstill → SIL3 / PLe		

This mode (only DS24x) is exclusively used to connect a SIL3 resp. PLe certificated SinCos sensor /encoder, which must be performed in accordance to chapter 5.3.

- In this operational mode a DS240 variant reproduces always the input frequency at [X6 | SINCOS IN 1] to the splitter outputs [X4 | RS422 OUT] and [X5 | RS422 OUT].
- At terminal [X10 | CONTROL IN] the inputs Control1 and Control2 are available for control signals.

6.7. „Operational Mode“ = 1

Mode	1		
Sensor1	[X6 | SINCOS IN 1]	SinCos encoder	(SIN+, SIN-, COS+, COS-)
Sensor2	[X10 | CONTROL IN]	Incremental HTL encoder	(A, B, 90°)
Control1	[X10 | CONTROL IN]	HTL/PNP control signal	(complementary)
Control2	Control signal input not available		
Achievable Safety Level	Speed → SIL3 / PLe Direction → SIL3 / PLe Standstill → SIL3 / PLe		

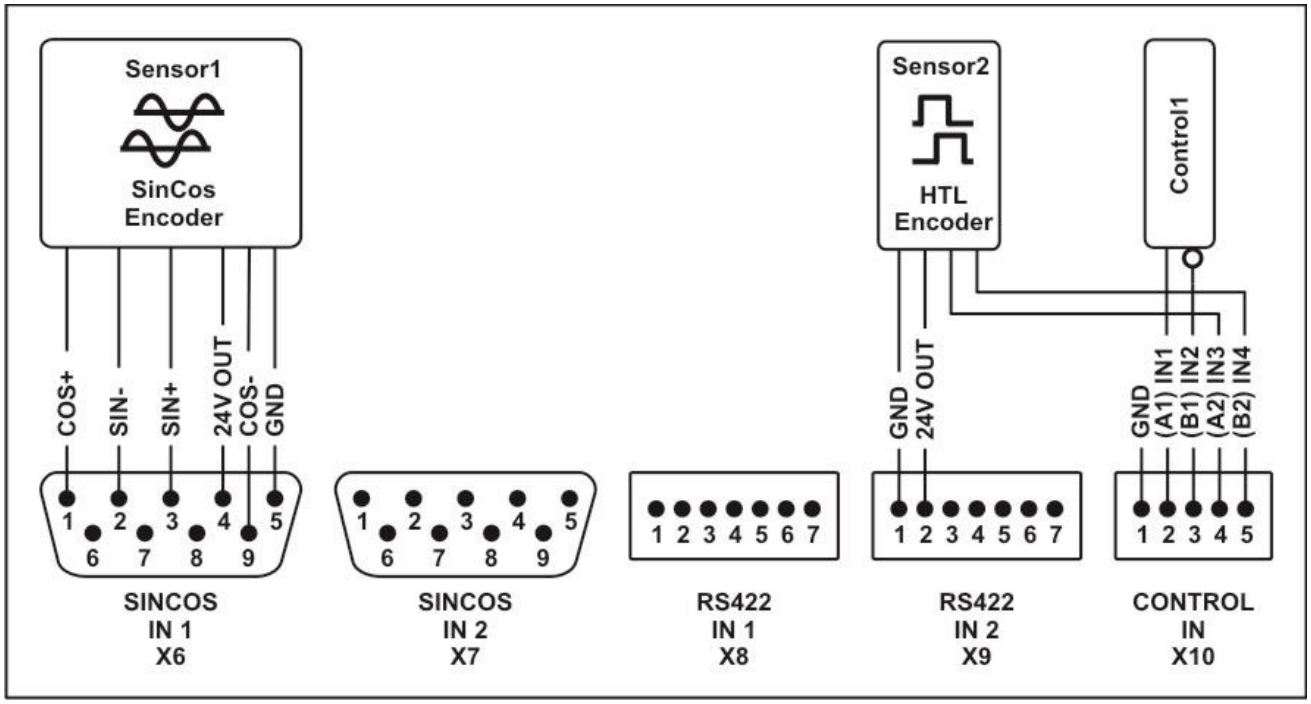

This mode (only DS23x) allows to evaluate a dual channel system, equipped with two different encoder types. Therefor a combination of a SinCos encoder and an incremental dual channel HTL encoder is used. The SinCos encoder must be performed in accordance to chapter 5.3 and the incremental encoder to chapter 5.5.

- In this operational mode a DS230 variant reproduces always the input frequency at [X6 | SINCOS IN 1] to the splitter output [X5 | SINCOS OUT].
- A DS230 variant reproduces selectively the input frequency of Sensor1 or Sensor2 to the splitter output [X4 | RS422 OUT].
- The inputs at [X7 | SINCOS IN 2], [X8 | RS422 IN 1] and [X9 | RS422 IN 2] have no function.
- When connecting the HTL encoder to terminal [X10] pin 4, 5, the Control2 input is no more available. In this case only the Control1 input can be used.

6.8. „Operational Mode“ = 2

Mode	2		
Sensor1	[X6 | SINCOS IN 1]	SinCos encoder	(SIN+, SIN-, COS+, COS-)
Sensor2	[X10 | CONTROL IN]	Incremental HTL encoder	(A) single channel
Control1	[X10 | CONTROL IN]	HTL/PNP control signal	(complementary)
Control2	Control signal input not available		
Achievable Safety Level	Speed → SIL3 / PLe Direction → SIL3 / PLe **** Standstill → SIL3 / PLe ****		

**** A safety level can only be achieved in these cases, if it is physically ensured that there only can be only one direction of rotary and linear movement. This can be realized for example by using a self-locking gearbox.

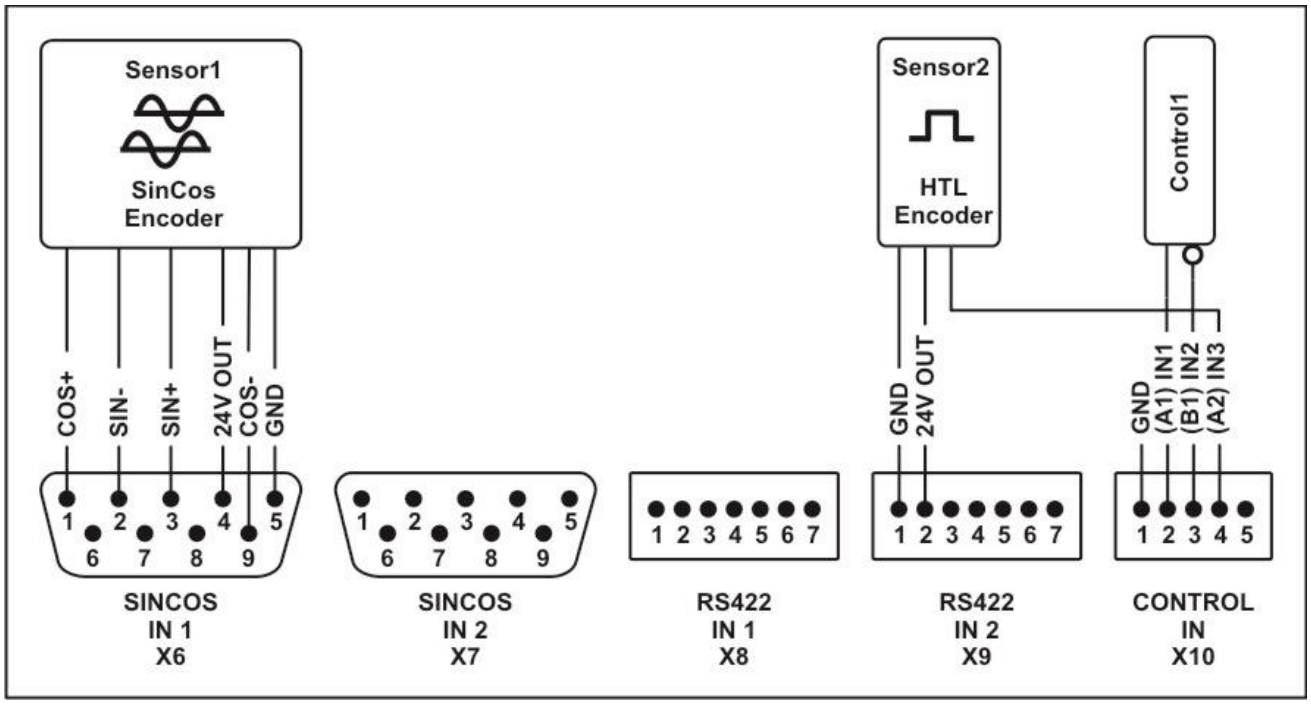

This mode (only DS23x) allows to evaluate a dual channel system, equipped with two different encoder types. Therefor a combination of a SinCos encoder and an incremental single channel HTL encoder is used. The SinCos encoder must be performed in accordance to chapter 5.3 and the incremental encoder to chapter 5.5.

- In this operational mode a DS230 variant reproduces always the input frequency at [X6 | SINCOS IN 1] to the splitter output [X5 | SINCOS OUT].
- A DS230 variant reproduces selectively the input frequency of Sensor1 or Sensor2 to the splitter output [X4 | RS422 OUT].
- The inputs at [X7 | SINCOS IN 2], [X8 | RS422 IN 1] and [X9 | RS422 IN 2] have no function.
- When connecting the HTL encoder to terminal [X10] pin 4 and 5, the Control2 input is no more available. In this case only the Control1 input can be used.

6.9. „Operational Mode“ = 3

Mode	3
Sensor1	[X10 | CONTROL IN] Incremental HTL encoder (A, B, 90°)
Sensor2	[X10 | CONTROL IN] Incremental HTL encoder (A, B, 90°)
Control1	Control signal input not available
Control2	Control signal input not available
Achievable Safety Level	Speed → SIL3 / PLe Direction → SIL3 / PLe Standstill → SIL3 / PLe

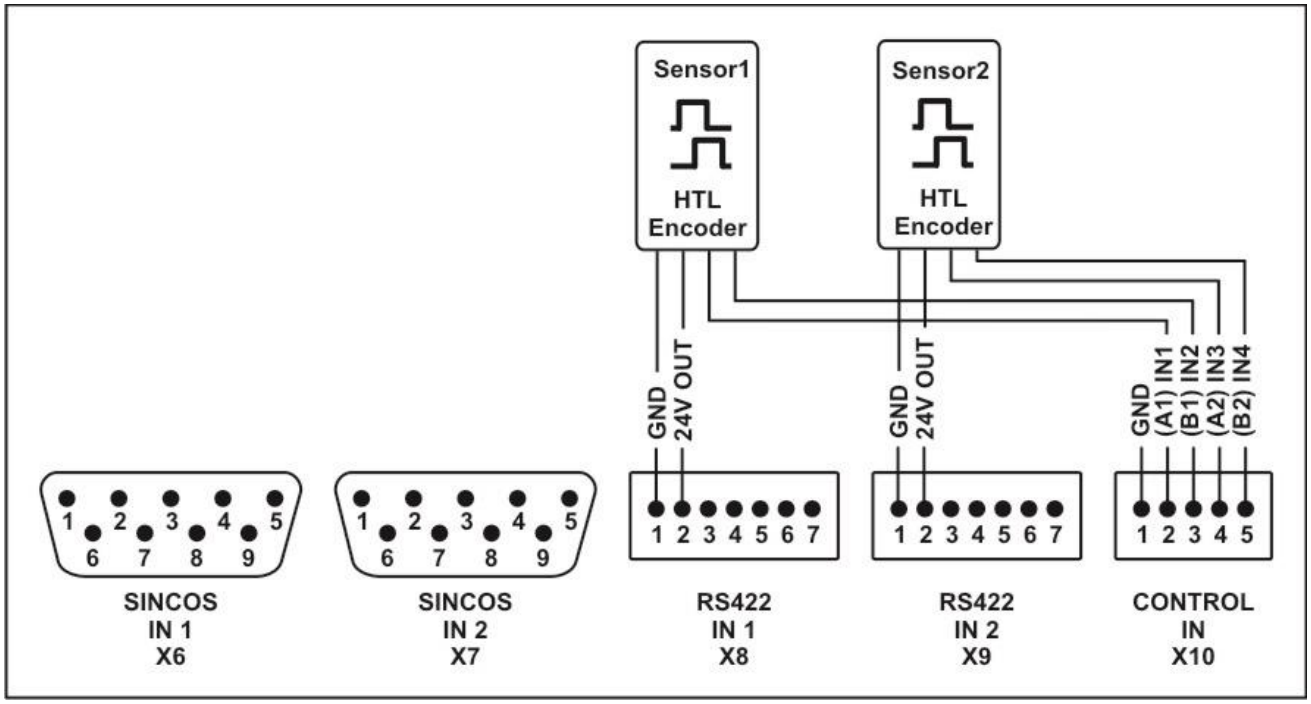

This mode (only DS23x) allows to evaluate a dual channel system, equipped with two incremental dual channel HTL encoders. The encoder must be performed in accordance to chapter 5.5.

- A DS230 variant reproduces selectively the input frequency of Sensor1 or Sensor2 to the splitter output [X4 | RS422 OUT].
- The inputs at [X6 | SINCOS IN 1], [X7 | SINCOS IN 2], [X8 | RS422 IN 1] und [X9 | RS422 IN 2] have no function.
- Please note, that no more Control1 and Control2 inputs for external commands are available, when connecting both encoders to terminal X10] pin 2, 3 and 4, 5.

6.10. „Operational Mode“ = 4

Mode	4
Sensor1	[X10 | CONTROL IN] Incremental HTL encoder (A, B, 90°)
Sensor2	[X10 | CONTROL IN] Incremental HTL encoder (A) single channel
Control1	Control signal input not available
Control2	Control signal input not available
Achievable Safety Level	Speed → SIL3 / PLe Direction → SIL3 / PLe **** Standstill → SIL3 / PLe ****

**** A safety level can only be achieved in these cases, if it is physically ensured that there only can be only one direction of rotary and linear movement. This can be realized for example by using a self-locking gearbox.

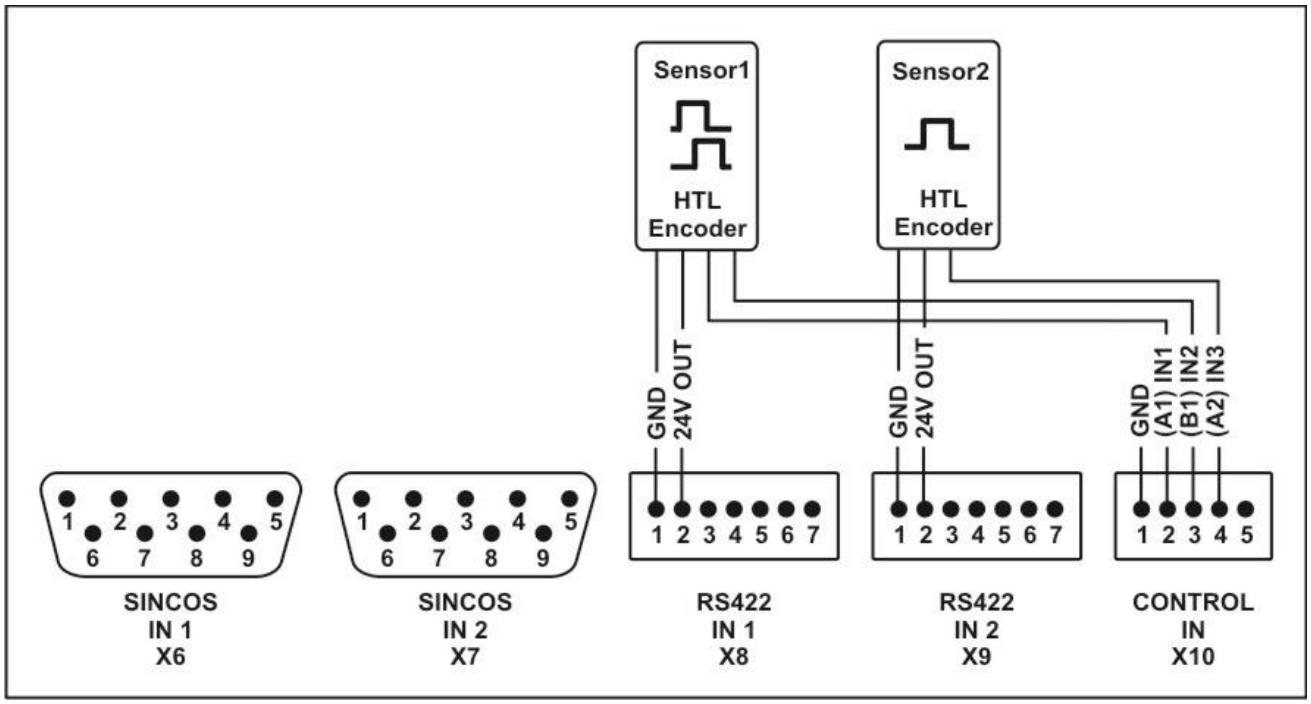

This mode (only DS23x) allows to evaluate a dual channel system, equipped with two different encoder types. Therefor a combination of an incremental dual channel HTL encoder as well as a single channel HTL encoder is used. The connections of both encoders must be performed in accordance to chapter 5.5.

- A DS230 variant reproduces selectively the input frequency of Sensor1 or Sensor2 to the splitter output [X4 | RS422 OUT].
- The inputs at [X6 | SINCOS IN 1], [X7 | SINCOS IN 2], [X8 | RS422 IN 1] und [X9 | RS422 IN 2] have no function.
- Please note, that no more Control1 and Control2 inputs for external commands are available, when connecting both encoders to terminal X10] pin 2, 3 and 4.

6.11. „Operational Mode“ = 5

Mode	5
Sensor1	[X10 | CONTROL IN] Incremental HTL encoder (A) single channel
Sensor2	[X10 | CONTROL IN] Incremental HTL encoder (A) single channel
Control1	Control signal input not available
Control2	Control signal input not available
Achievable Safety Level	Speed → SIL3 / PLe Direction → SIL3 / PLe **** Standstill → SIL3 / PLe ****

**** A safety level can only be achieved in these cases, if it is physically ensured that there only can be only one direction of rotary and linear movement. This can be realized for example by using a self-locking gearbox.

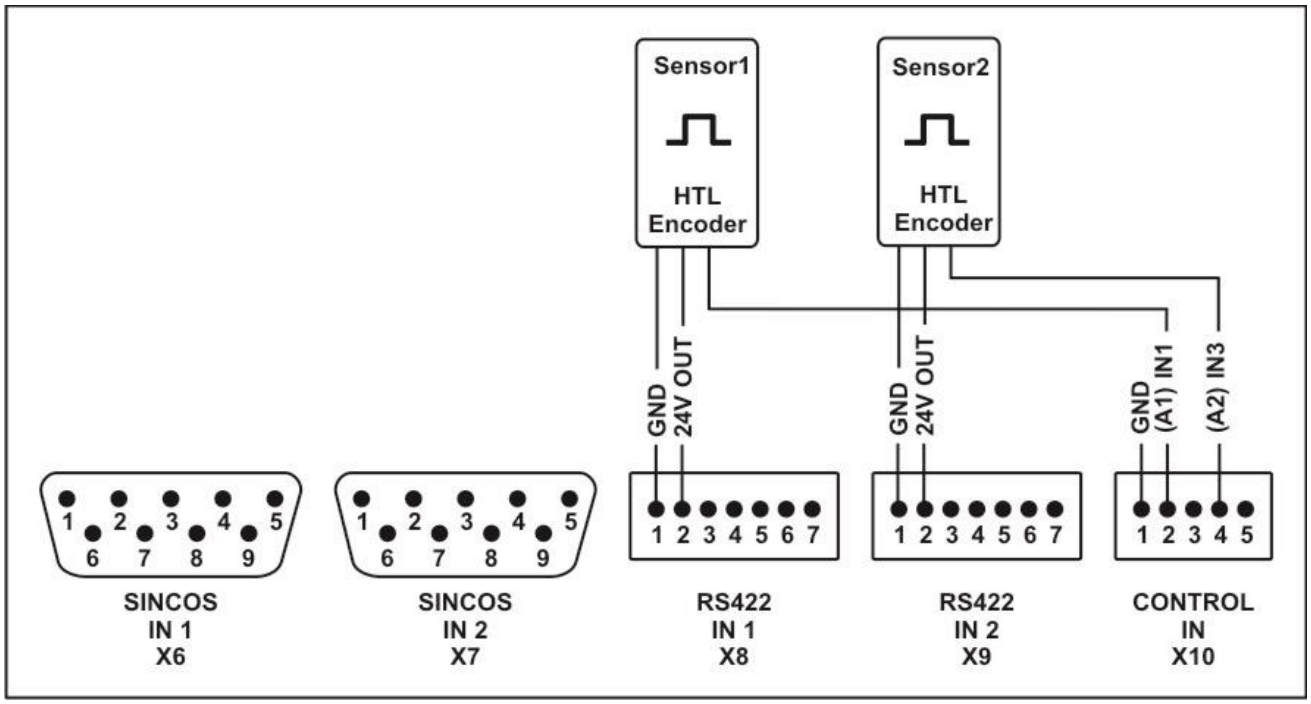

This mode (only DS23x) allows to evaluate a dual channel system, equipped with two identical encoder types. Therefor a combination of two incremental single channel HTL encoders is used. The connections of both encoders must be performed in accordance to chapter 5.5.

- A DS230 variant reproduces selectively the input frequency of Sensor1 or Sensor2 to the splitter output [X4 | RS422 OUT].
- The inputs at [X6 | SINCOS IN 1], [X7 | SINCOS IN 2], [X8 | RS422 IN 1] und [X9 | RS422 IN 2] have no function.
- Please note, that no more Control1 and Control2 inputs for external commands are available, when connecting both encoders to terminal X10] pin 2 and 4.

6.12. „Operational Mode“ = 6

Mode	6		
Sensor1	[X6 | SINCOS IN 1]	SinCos encoder	(SIN+, SIN-, COS+, COS-)
Sensor2	[X9 | RS422 IN 2]	Incremental RS422 / TTL encoder	(A, /A, B, /B)
Control1	[X10 | CONTROL IN]	HTL/PNP control signal	(complementary)
Control2	[X10 | CONTROL IN]	HTL/PNP control signal	(complementary)
Achievable Safety Level	Speed → SIL3 / PLe Direction → SIL3 / PLe Standstill → SIL3 / PLe		

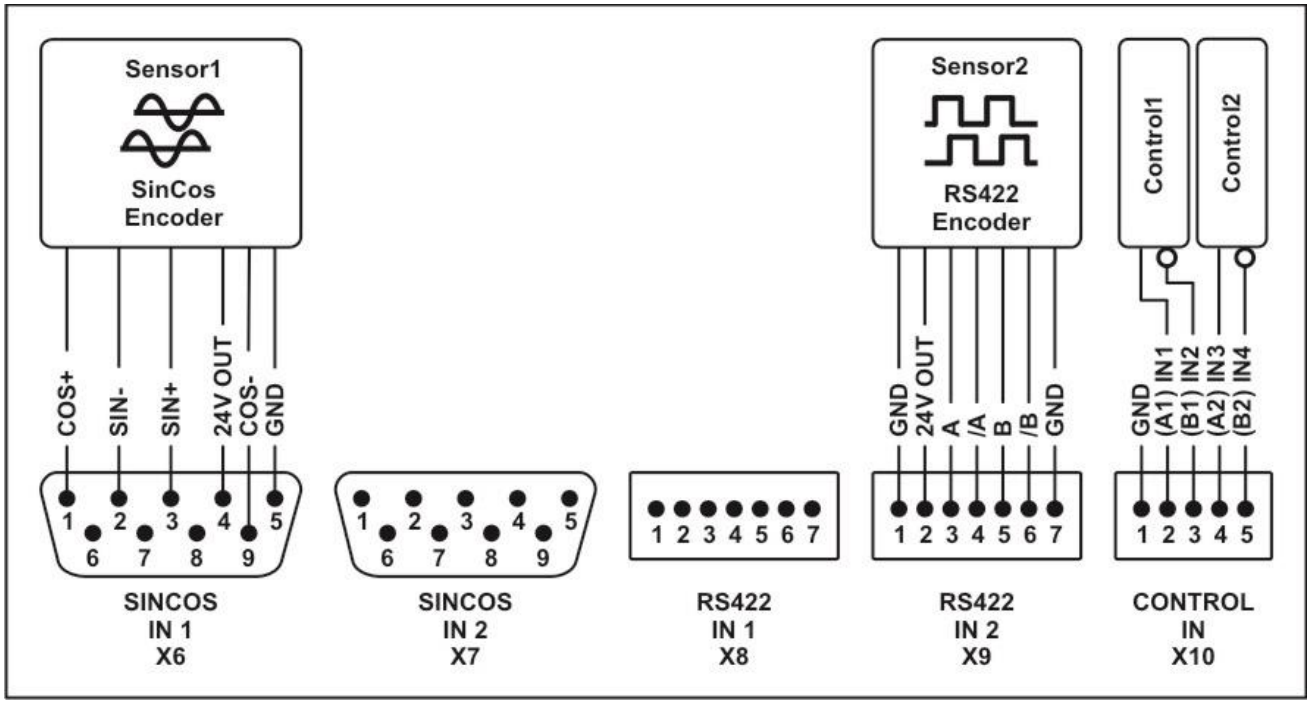

This mode (only DS23x) allows to evaluate a dual channel system, equipped with two different encoder types. Therefor a combination of a SinCos and a RS422/TTL encoder is used. The SinCos encoder must be performed in accordance to chapter 5.3 and the RS422/TTL encoder to chapter 5.4.

- In this operational mode a DS230 variant reproduces always the input frequency at [X6 | SINCOS IN 1] to the splitter output [X5 | SINCOS OUT].
- A DS230 variant reproduces selectively the input frequency of Sensor1 or Sensor2 to the splitter output [X4 | RS422 OUT].
- The inputs at [X7 | SINCOS IN 2] and [X8 | RS422 IN 1] have no function.
- Both control inputs (Control1 and Control2) are available for control signals at [X10 | CONTROL IN].

6.13. „Operational Mode“ = 7

Mode	7		
Sensor1	[X8 | RS422 IN 1]	Incremental RS422 / TTL encoder	(A, /A, B, /B)
Sensor2	[X9 | RS422 IN 2]	Incremental RS422 / TTL encoder	(A, /A, B, /B)
Control1	[X10 | CONTROL IN]	HTL/PNP control signal	(complementary)
Control2	Control signal input not available		
Achievable Safety Level	Speed → SIL3 / PLe Direction → SIL3 / PLe Standstill → SIL3 / PLe		

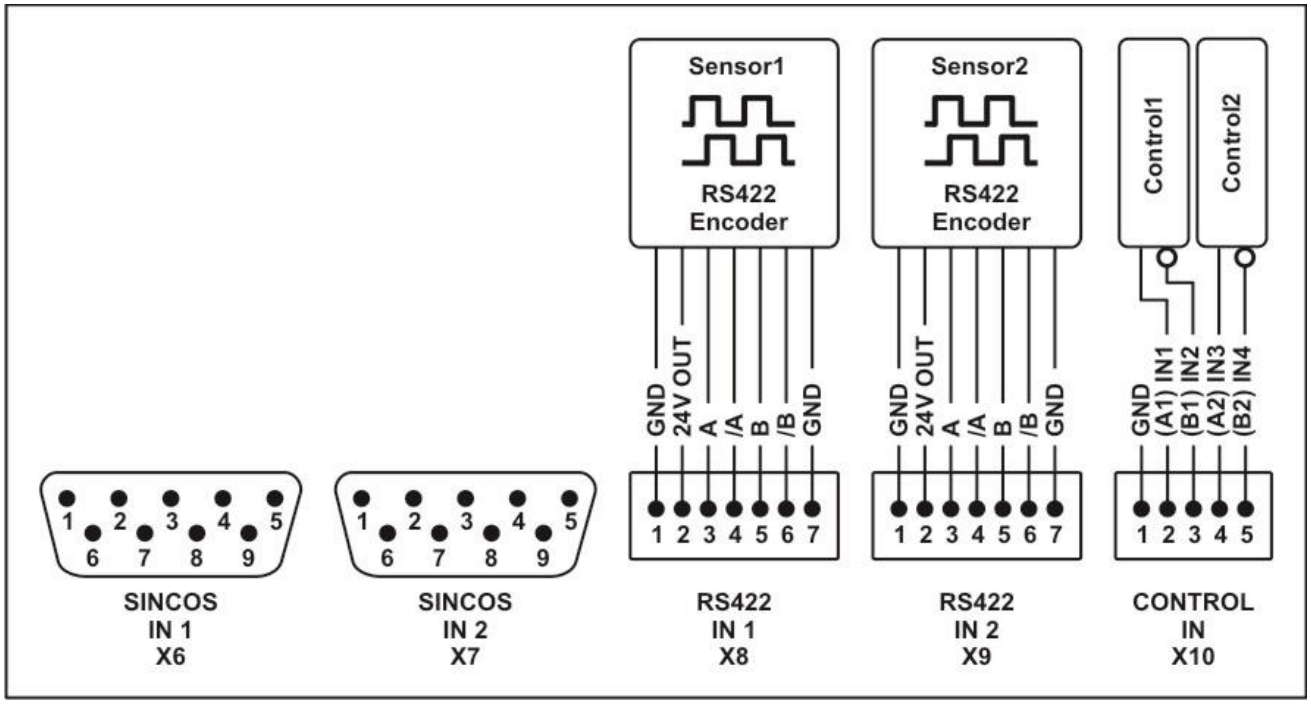

This mode (only DS23x) allows to evaluate a dual channel system, equipped with two identical RS422/TTL incremental encoders. The encoder must be performed in accordance to chapter 5.4.

- A DS230 variant reproduces selectively the input frequency of Sensor1 or Sensor2 to the splitter output [X4 | RS422 OUT].
- The inputs at [X6 | SINCOS IN 1] and [X7 | SINCOS IN 2] have no function.
- Both control inputs (Control1 and Control2) are available for control signals at [X10 | CONTROL IN].

6.14. „Operational Mode“ = 8

Mode	8		
Sensor1	[X8 | RS422 IN 1]	Incremental RS422 / TTL encoder	(A, /A, B, /B)
Sensor2	[X9 | RS422 IN 2]	Incremental HTL encoder	(A, B, 90°)
Control1	[X10 | CONTROL IN]	HTL/PNP control signal	(complementary)
Control2	Control signal input not available		
Achievable Safety Level	Speed → SIL3 / PLe Direction → SIL3 / PLe Standstill → SIL3 / PLe		

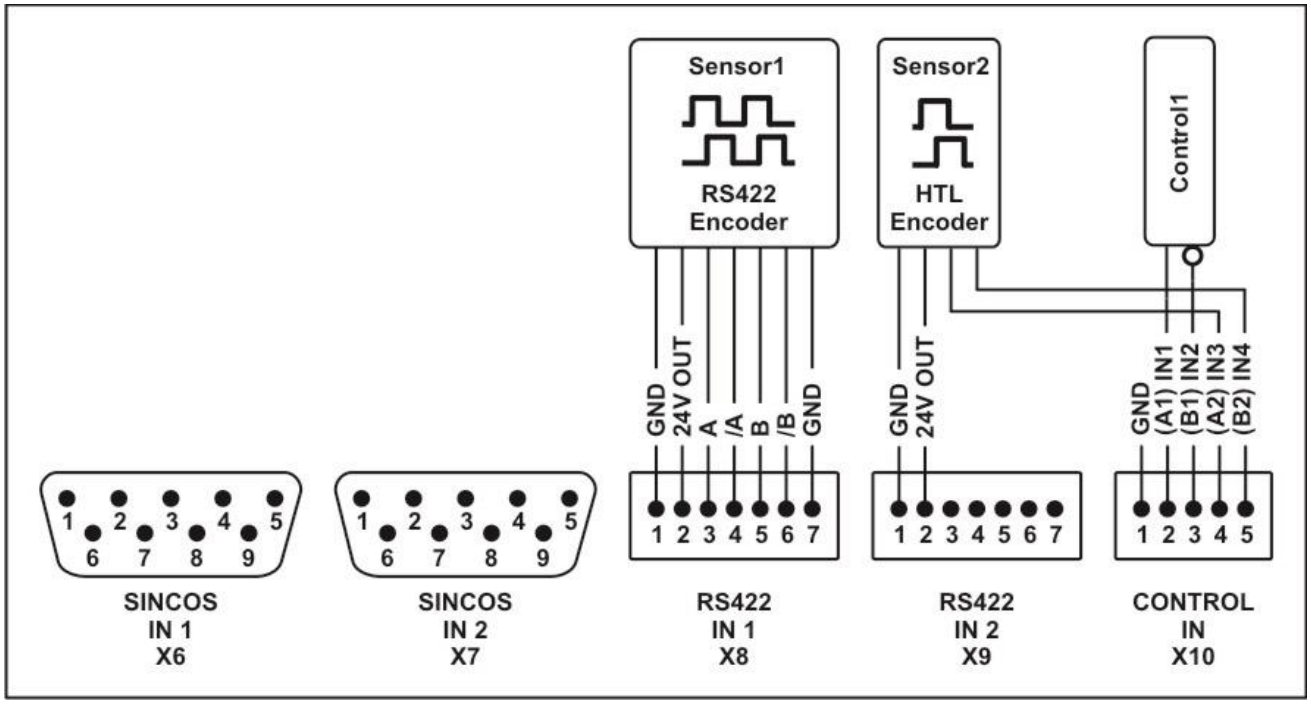

This mode (only DS23x) is used to evaluate a dual channel system, equipped by two different incremental encoder resp. sensor types. Therefore an incremental RS422/TTL and a dual channel HTL encoder are used. The RS422/TTL encoder must be performed in accordance to chapter 5.4 and the HTL encoder to chapter 5.5.

- A DS230 variant reproduces selectively the input frequency of Sensor1 or Sensor2 to the splitter output [X4 | RS422 OUT].
- The inputs at [X6 | SINCOS IN 1], [X7 | SINCOS IN 2] and [X9 | RS422 IN 2 have no function.
- When connecting the HTL encoder to terminal [X10] pin 4 and 5, the Control2 input is no more available. In this case only the Control1 input can be used.

6.15. „Operational Mode“ = 9

Mode	9		
Sensor1	[X8 | RS422 IN 1]	Incremental RS422 / TTL encoder	(A, /A, B, /B)
Sensor2	[X9 | RS422 IN 2]	Incremental HTL encoder	(A) single channel
Control1	[X10 | CONTROL IN]	HTL/PNP control signal	(complementary)
Control2	Control signal input not available		
Achievable Safety Level	Speed → SIL3 / PLe Direction → SIL3 / PLe Standstill → SIL3 / PLe		

**** A safety level can only be achieved in these cases, if it is physically ensured that there only can be only one direction of rotary and linear movement. This can be realized for example by using a self-locking gearbox.

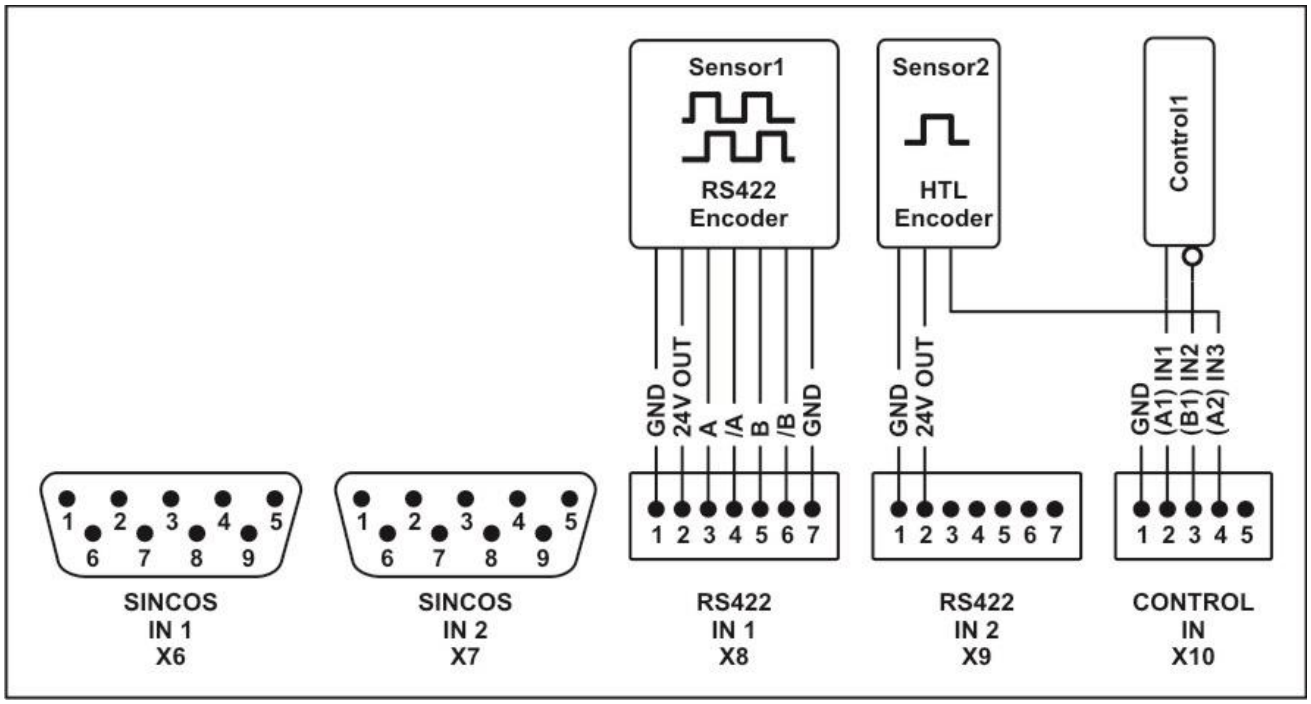

This mode (only DS23x) is used to evaluate a dual channel system, equipped by two different incremental encoder resp. sensor types. Therefore an incremental RS422/TTL encoder and a single-channel HTL encoder are used. The RS422/TTL encoder must be performed in accordance to chapter 5.4 and the HTL encoder to chapter 5.5.

- A DS230 variant reproduces selectively the input frequency of Sensor1 or Sensor2 to the splitter output [X4 | RS422 OUT].
- The inputs at [X6 | SINCOS IN 1], [X7 | SINCOS IN 2] und [X9 | RS422 IN 2 have no function.
- When connecting the HTL encoder to terminal [X10] pin 4 and 5, the Control2 input is no more available. In this case only the Control1 input can be used.

7. Start-Up the Unit

The following chapter describes the various options for setting and configuring the unit.
In order to put the unit into operation or to change settings and Parameters, the following measures must be taken:

- Connect the unit to a 18 … 30 VDC power supply source
- Change the DIL switch slider 3 to its OFF position (unit-state: „Programming Mode“)
- Connect the unit to the OS6.0 operator surface or alternatively to a BG230 programming- and display unit.

- „Programming Mode“ (DIL switch) only for start-up
- Set all DIL switch sliders to „ON“ after start-up
- Protect the DIL switch sliders after start-up (e. g. by covering with an adhesive tape)
- Normal operation is only permitted when the yellow LED is permanently off
- The safety function of the unit cannot be guaranteed before the commissioning is completed.

7.1. Setup by PC

The parameterization of the safety device can be done by the operator software OS6.0. The operator software is included in the delivery on CD and is also available for download on www.motrona.com. After a successful installation of the operator software OS6.0 and the USB driver (see document "installation USB driver") the PC can be connected via a USB cable to the safety device. When starting the software, the following screen appears:

Parametrization via PC

The functions of the operator software OS6.0 are described in the separate OS6.0 manual.

7.2. Setup by the Programming Module BG230

The parameterization of the safety device also can be done by the programming module BG230. The optional display- and programming module BG230 is used for Parameter settings and diagnosis without a PC. It is easily connectable by plugging onto the front of the safety unit.

Parameterization by BG230

The functions of the BG230 programming- and display unit are described in the BG230 manual.

7.3. Parameter / Menu Overview

This section provides an overview of the menus and their assignments to the different unit functions. The menu names are printed bold and associated Parameters are arrayed directly under the menu names.

No.	Menu / Parameter
	Main Menu
000	Operational Mode
001	Sampling Time
002	Wait Time
003	F1-F2 Selection
004	Div. Switch %-f
005	Div. %-Value
006	Div. f-Value
007	Div. Calculation
008	Div. Filter
009	Error Simulation
010	Power-up Delay
011	Reserved
012	Reserved
	Sensor1 Menu
013	Direction1
014	Multiplier1
015	Divisor1
016	Position Drift1
017	Phase Err Count1
018	Set Frequency1
019	Reserved
	Sensor2 Menu
020	Direction2
021	Multiplier2
022	Divisor2
023	Position Drift2
024	Phase Err Count2
025	Set Frequency2
026	Reserved

No.	Menu / Parameter
	Preselect Menu
027	Preselect OUT1.H
028	Preselect OUT1.L
029	Preselect OUT2.H
030	Preselect OUT2.L
031	Preselect OUT3.H
032	Preselect OUT3.L
033	Preselect OUT4.H
034	Preselect OUT4.L
035	Preselect REL1.H
036	Preselect REL1.L
037	Reserved
038	Reserved

Continuation “Parameter / Menu Overview”:

No.	Menu / Parameter
	Switching Menu
039	Switch Mode OUT1
040	Switch Mode OUT2
041	Switch Mode OUT3
042	Switch Mode OUT4
043	Switch Mode REL1
044	Pulse Time OUT1
045	Pulse Time OUT2
046	Pulse Time OUT3
047	Pulse Time OUT4
048	Pulse Time REL1
049	Hysteresis OUT1
050	Hysteresis OUT2
051	Hysteresis OUT3
052	Hysteresis OUT4
053	Hysteresis REL1
054	Startup Mode
055	Startup Output
056	Standstill Time
057	Lock Output
058	Action Output
059	Action Polarity
060	Reserved
061	Reserved

No.	Menu / Parameter
	Command Menu
062	Input2 Function
063	Input2 Configuration
064	Input2 Function
065	Input2 Configuration
066	Reserved
067	Reserved
	Serial Menu
068	Serial Unit No.
069	Serial Baud Rate
070	Serial Format
071	Serial Page
072	Serial Init
073	Reserved
	Splitter Menu
074	RS Selector
075	Reserved
076	Reserved
077	Reserved
	Analog Menu
078	Analog Start
079	Analog End
080	Analog Gain
081	Analog Offset
082	Reserved
083	Reserved

7.4. Parameter Description

7.4.1. Important notes for DS240 / DS246

When using a DS240 resp.DS246 variant, the following hints must be noted:

Nr.	Parameter	Hints for DS240 /. DS246
000	Operational Mode	Exclusively „Mode = 0“ may be used
003	F1-F2 Selection	Both settings have the same effect
013	Direction1	Direction1 and Direction2 must be equal
014	Multiplier1	The setting must be „1“
015	Divisor1	The setting must be „1“
016	Position Drift1	Position Drift1 and Position Drift2 must be equal
017	Phase Err Count1	Phase Err Count1 and Phase Err Count2 must be equal
020	Direction2	Direction1 and Direction2 must be equal
021	Multiplier2	The setting must be „1“
022	Divisor2	The setting must be „1“
023	Position Drift2	Position Drift1 and Position Drift2 must be equal
024	Phase Err Count2	Phase Err Count1 and Phase Err Count2 must be equal
062	Input 1 Function	To clear drift errors, Clear Drift 1&2 must be used
064	Input 2 Function	To clear drift errors, Clear Drift 1&2 must be used
074	RS Selector	Both settings have the same effect

7.4.2. Main Menu

No.	Parameter	Range	Default
000	**Operational Mode:** **Important notes** for **DS240 / DS246** see chapter 7.4.1 This parameter determines which frequency input ([X6] up to [X10]) is assigned to the sensor channel Sensor1 and Sensor2. Depending on the assignment, up to two control inputs (Control1 resp. Control2) for external commands are available. Notes and examples for wiring the encoders, control inputs etc. can be found in chapter 6.5, et seq.	0 - 9	0

Operational Mode of DS23x:
To ensure the safety function, two independent sensors / encoders are required.

Mode	Sensor1	Sensor2	Control1	Control2
0	SinCos encoder at [X6 | SINCOS IN 1]	SinCos encoder at [X7 | SINCOS IN 2]	available for control signals	available for control signals
1	SinCos encoder at [X6 | SINCOS IN 1]	HTL encoder (A, B, 90°) [X10 | CONTROL IN]	available for control signals	Not available!
2	SinCos encoder at [X6 | SINCOS IN 1]	HTL encoder (A) at [X10 | CONTROL IN]	available for control signals	Not available!
3	HTL encoder (A, B, 90°) [X10 | CONTROL IN]	HTL encoder (A, B, 90°) [X10 | CONTROL IN]	Not available!	Not available!
4	HTL encoder (A, B, 90°) [X10 | CONTROL IN]	HTL encoder (A) at [X10 | CONTROL IN]	Not available!	Not available!
5	HTL encoder (A) at [X10 | CONTROL IN]	HTL encoder (A) at [X10 | CONTROL IN]	Not available!	Not available!
6	SinCos encoder at [X6 | SINCOS IN 1]	RS422 encoder at [X9 | RS422 IN 2]	available for control signals	available for control signals
7	RS422 encoder at [X8 | RS422 IN 1]	RS422 encoder at [X9 | RS422 IN 2]	available for control signals	available for control signals
8	RS422 encoder at [X8 | RS422 IN 1]	HTL encoder (A, B, 90°) [X10 | CONTROL IN]	available for control signals	Not available!
9	RS422 encoder at [X8 | RS422 IN 1]	HTL encoder (A) at [X10 | CONTROL IN]	available for control signals	Not available!

Operational Mode of DS24x:
To ensure the safety function, a SIL3/PLe certified SinCos sensor resp. encoder is required.

Mode	Sensor1	Sensor2	Control1	Control2
0	SIL3/PLe SinCos encoder [X6 | SINCOS IN 1]	Sensor1 and Sensor2 are internally bridged	available for control signals	available for control signals

Continuation "Main Menu":

No.	Parameter	Range	Default
001	<u>Sampling Time</u>: The configured value corresponds to the <u>minimum</u> measurement time. The Parameter is used as a filter in case of irregular frequencies. This Parameter has a direct influence to the reaction time of the unit. The setting is valid for both inputs channels. 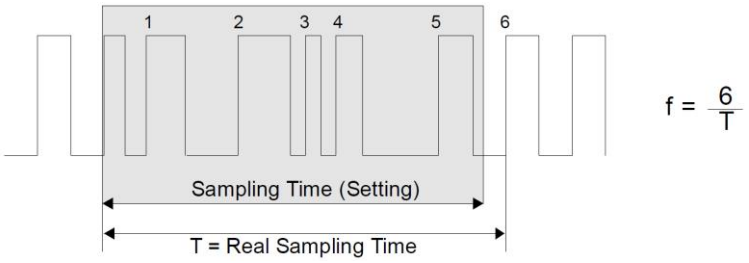 	0,001 - 9,999 (sec.)	0,001
002	<u>Wait Time</u>: Defines the period time of the lowest frequency resp. the waiting time between 2 rising edges, which is detected as „Frequency = 0" by the unit. 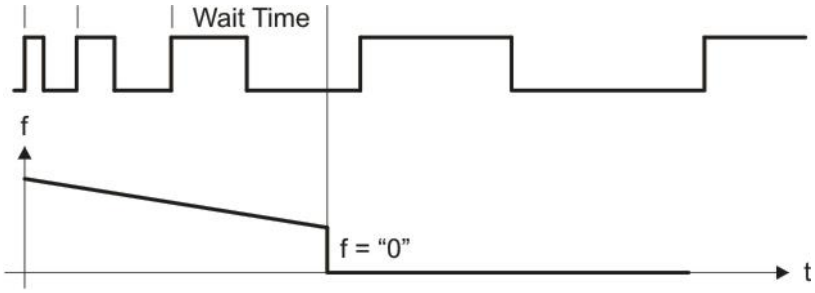 All frequencies with a period longer than the Wait Time value will be interpreted as frequency = 0. 0,010 — Frequency = „0" with frequencies smaller than 100 Hz … — 9,999 — Frequency = „0" with frequencies smaller than 0.1 Hz The setting is valid for both inputs channels.	0,010 - 9,999 (sec.)	1,000

Continuation "Main Menu":

<table>
<tr><th>No.</th><th>Parameter</th><th>Range</th><th>Default</th></tr>
<tr><td>003</td><td>F1-F2 Selection (Basic Frequency Selection):

Important notes for DS240 / DS246 see chapter 7.4.1

This Parameter determines, which of both input frequencies of sensor1 or sensor2 (see parameter 000) is monitored and processed as basic frequency.

The basic frequency selection affects the following outputs:
- Analog Output
- Control Outputs
- Relay Outputs

And thus the following menus:
- preselected thresholds in the Preselect Menu (see chapter 7.4.5)
- switching behaviors in the Switching Menu (see chapter 7.4.6)
- analog output in the Analog Menu (see chapter 7.4.10)

<table><tr><td>0</td><td>Frequency of sensor1 serves as basic frequency</td></tr><tr><td>1</td><td>Frequency of sensor2 serves as basic frequency</td></tr></table></td><td>0 - 1</td><td>0</td></tr>
</table>

Continuation "Main Menu":

No.	Parameter	Range	Default
004	**Div. Switch %-f** (Divergence switching point %-Hz): The unit constantly compares the frequencies of sensor1 and Sensor2 to the adjusted, maximum allowed divergence. Usually the comparison works percentages. Application-specific with lower frequencies a percentages comparison can be problematic, so that a direct monitoring of the difference frequency in Hz can deliver better results. This Parameter allows to define a limit. When undershooting the adjusted value the comparison will proceed no more percentages, but absolute in Hz (see parameter 006 and 006).	0 - 999.99 (Hz)	100.00
005	**Div. %-Value** (maximum Divergence %): Defines the maximum allowed percentage divergence between the frequencies of sensor1 and sensor2.* If this value is exceeded, the unit switches to an error status (see parameter 004).	0 - 100 (%)	10
006	**Div. f-Value** (maximum Divergence Hz): Defines the maximum allowed absolute divergence in Hz between the frequencies of sensor1 and sensor2.* If the adjusted value is exceeded, the unit switches to an error status (see parameter 004).	0 - 99,99 (Hz)	30,00
007	**Div. Calculation** (Divergence Calculation Mode): Defines a reference value in order to determine the percentage divergence.* **0:** reference value is the frequency of sensor1: △(%) = (sensor1 - sensor2) : sensor1 x 100% **1:** reference value is the frequency of sensor2: △(%) = (sensor2 - sensor1) : sensor1 x 100%	0 - 1	0

)* The divergence calculation depends on the frequency-scaling of sensor1 and sensor2 (see chapter 7.4.3 resp. 7.4.4)

Continuation “Main Menu”:

<table>
<tr><th>No.</th><th>Parameter</th><th>Range</th><th>Default</th></tr>
<tr><td>008</td><td><u>Div. Filter</u>:
The exact function will be described soon!!!
This digital filter parameter evaluates the divergence between sensor1 and sensor2.
<table>
<tr><td>0</td><td>The filter is not active:
The unit reacts immediately to each frequency deviation.</td></tr>
<tr><td>10</td><td>Medium filter:
The unit tolerates temporary deviations and fluctuations, e. g. caused from torsion or mechanical vibrations and reacts delayed to deviations between both input frequencies.</td></tr>
<tr><td>20</td><td>Strongest filter:
The unit tolerates temporary deviations and fluctuations, e. g. caused from torsion or mechanical vibrations and reacts with a very long delay to prolonged deviations between both input frequencies.</td></tr>
</table></td><td>0 - 20</td><td>1</td></tr>
</table>

Continuation „Main Menu“:

<table>
<tr><th>No.</th><th>Parameter</th><th>Range</th><th>Default</th></tr>
<tr><td>009</td><td><u>Error Simulation</u>:
This Parameter is only allowed in the “Programming Mode” (see chapter 5.11) and serves only for test purposes during the commissioning procedure. It allows to simulate and prevent the following error messages:
<table>
<tr><td>0</td><td>Error state:
Sets the unit into error status. By using this Parameter it is possible to check, if the entire follow-up system reacts correctly at error status.</td></tr>
<tr><td>1</td><td>Normal state:
Before exiting the “Programming Mode”,
the Parameter always must be set to 1.</td></tr>
<tr><td>2</td><td>Error clearing:
All errors reported by the unit will be reset.</td></tr>
</table>
A direct changeover between 0 and 2 should be avoided
After the test, this parameter must be reset to the "Default".</td><td>0 - 2</td><td>1</td></tr>
<tr><td>010</td><td><u>Power-up Delay</u>:
A delay time setting is recommended to ensure for all connected encoders a safely power up and enough time for stabilization after switching the encoder supply. The signal evaluation will start only after the selected delay.</td><td>1 - 1,000
(sec.)</td><td>0,100</td></tr>
<tr><td>011</td><td>Reserved</td><td></td><td></td></tr>
<tr><td>012</td><td>Reserved</td><td></td><td></td></tr>
</table>

The safety function of the unit cannot be guaranteed before the commissioning is completed.

7.4.3. Sensor1 Menu

No.	Parameter	Range	Default
013	**Direction1**: **Important notes** for **DS240 / DS246** see chapter 7.4.1 Parameter to assign a direction for Sensor1 0 — No changes 1 — Changes the sign of the direction This allows to reverse the direction of Sensor1 in order to adapt Sensor1 to the direction of Sensor2. For SIN / COS or A, B input signals, the primary direction is defined by the signal phase shifting. With single-channel HTL signals (only channel A) the direction can be defined by using a static signal at the channel B input. The direction selection affects the following outputs: - Analog Output - Control Outputs - Relay Outputs And thus the following menus: - preselected thresholds in the Preselect Menu (see chapter 7.4.5) - switching behaviors in the Switching Menu (see chapter 7.4.6) - analog output in the Analog Menu (see chapter 7.4.10)	0 - 1	0
014	**Multiplier1** (proportional pulse scaling factor): Is used to modulate the frequencies of Sensor 1 and Sensor2. This scaling affects only the calculation of the divergence (see parameter 004, et seq.).	1 - 10 000	1
015	**Divisor1** (reciprocal pulse scaling factor): To adjust the frequencies of sensor1 and sensor2. This scaling affects only the calculation of the divergence (see parameter 004, et seq.).	1 - 10 000	1

When using two encoders with differing pulse rates or in case of a mechanical reduction between both encoders, the higher frequency must be converted to the lower frequency by using the scaling factors (see chapter 8.).

Continuation "Sensor1 Menu":

No.	Parameter	Range	Default
016	**Position Drift1** (drift monitoring at standstill): **Important notes** for **DS240 / DS246** see chapter 7.4.1 This Parameter handles drift movements at standstill. If the period time of the input frequency exceeds the adjusted „Wait-Time" (see parameter 002), the sensor is assigned to frequency = 0, even if a slow drift movement is present. In case of an illegal drift, this Parameter allows to preset an error threshold (symmetrical position window +/- xxx pulses). The monitoring is only performed at standstill and begins at position 0, immediately when frequency = 0 is detected. **0** – Drift monitoring not active **xxx** – An error message appears, when the position is drifting out of the adjusted window of +/- xxx pulses (single edge evaluation).	0 - 100 000	0
017	**Phase Err Count1** (faulty pulse counting limit): **Important notes** for **DS240 / DS246** see chapter 7.4.1 The DS unit is able to detect incorrect pulse sequences as well as faulty phase positions. The error status will be released if the adjusted number of faulty pulses is exceeded. Incorrect pulses can be caused by faulty wirings, EMC-problems, incorrect mode settings, when turn up the encoder supply or when reverse the direction Parameter.	1- 1 000	10
018	**Set Frequency1** (simulation of a fixed encoder frequency): This Parameter is used for test purposes and allows to substitute the real encoder frequency by a fixed frequency. The setting will take effect, if - the unit state (DIL switch) = "Programming Mode" and - the setting of Parameter 62 = 7 (see also chapter 7.4.7)	-500 000.0 - 500 000.0 (Hz)	0
019	**Reserved**		

When using two encoders with differing pulse rates or in case of a mechanical reduction between both encoders, the higher frequency must be converted to the lower frequency by using the scaling factors (see chapter 8.).

7.4.4. Sensor2 Menu

No.	Parameter		Range	Default
019	Direction2:	The description of the sensor2 Parameters is identically with the sensor1 menu, but all settings are related to sensor2 which is specified by the „Operation Mode“.	0 - 1	0
020	Multiplier2:		1- 10 000	1
021	Divisor2:		1 - 10 000	1
022	Position Drift2:		0 - 100 000	0
023	Phase Err Count2:		1 - 1 000	10
024	Set Frequency2:		-500 000.0 - 500 000.0 (Hz)	0
025-026	Reserved			

When using 2 encoders with differing pulse rates or in case of a mechanical reduction between both encoders, the higher frequency must be converted to the lower frequency by using the scaling factors (see chapter 8.).

7.4.5. Preselect Menu

This menu is used to set the switching points of the following outputs:

- 1 x relay output [X1 | RELAY OUT]
- 4 x control output [X2 | CONTROL OUT]

All settings are related to the selected basic frequency (see parameter 003) considering to the adjusted scaling factor of the basic sensor (see chapter 7.4.3).

There are two separate switching points for each output, which allows e. g. to define the limit values for the “set-up mode” and “production mode”.

A switchover between the switching points „High“ and „Low“ can only be released by an external command, resp. by using one of the both control inputs at terminal [X10 | CONTROL IN]. The change will affect all outputs! Therefore the function „Preselection Change“ must be assigned to an unused input (see chapter 7.4.7 / Parameter 062 = 13). A switchover is only possible if the control input Control1 or Control2 in the selected "Operational Mode" (Parameter 000) is available (see chapter 6.5, et seq.).

Index „.H“ stands for „High“ and requires a higher limit value.
Index „.L“ stands for „Low“ and requires a lower limit value.

„Preselect Menu“

No.	Parameter	Range	Default
027	Preselect OUT1.H: Upper switching point of output OUT1 [X2:1-2]	-500 000.0 - 500 000.0 (Hz) (see basic frequency, Parameter 003)	10 000
028	Preselect OUT1.L: Lower switching point of output OUT1 [X2:1-2]		20 000
029	Preselect OUT2.H: Upper switching point of output OUT2 [X2:3-4]		30 000
030	Preselect OUT2.L: Lower switching point of output OUT2 [X2:3-4]		40 000
031	Preselect OUT3.H: Upper switching point of output OUT3 [X2:5-6]		50 000
032	Preselect OUT3.L: Lower switching point of output OUT3 [X2:5-6]		60 000
033	Preselect OUT4.H: Upper switching point of output OUT4 [X2:7-8]		70 000
034	Preselect OUT4.L: Lower switching point of output OUT4 [X2:7-8]		80 000
035	Preselect REL1.H: Upper switch-point of the relay output [X1:1-2]		1 000
036	Preselect REL1.L: Lower switching point of the relay output [X1:1-2]		2 000
037	Reserved		
038	Reserved		

- The upper switching point (index .H) is only active, if no error can be detected and if an external signal is triggered to the control input according to chapter 7.4.7.
- The operator has to assign the values to the switch-points correctly.
  The “High” value must always be higher than the “Low” value.

7.4.6. Switching Menu

This menu is used to set the switching conditions of the following outputs:

- 1 x relay output [X1 | RELAY OUT]
- 4 x control output [X2 | CONTROL OUT]

The following form of writing is used:

|f| = absolute value of the basic frequency (see parameter 003)
|Preselection| = absolute value of the switching point (see parameter 027, ff.)
f = direction dependent, direction signed basic frequency (see parameter 003)
Preselection = direction dependent, direction signed switching point (see parameter 027, ff.)

Additional features which can be assigned to the output:

{S} = self-locking function (see parameter 057 – Lock Output)
{H} = switching hysteresis (see parameter 049, ff. – Hysteresis)
{A} = start up delay (see parameter 055 – Startup Mode)

- When using Switch Mode 2 or 6, a hysteresis is useful in order to avoid "bouncing" of the outputs at the switching point.
- When using Switch Mode 7 or 8, the specified standstill-time (see parameter 056) must be higher than the adjusted wipe period (see parameter 044, ff.). This is helpful to prevent a breakdown of the wipe signal before the wipe period has been elapsed.
- With negative measuring values and presets a higher numerical value is smaller than a lower numerical value, thus e. g. -1000 < -500.

„Switching Menu“:

<table>
<tr><th>No.</th><th>Parameter</th><th>Range</th><th>Default</th></tr>
<tr><td>039</td><td><u>Switch Mode OUT1 (switching condition for OUT1)</u>:
<table>
<tr><td>0</td><td>|f| >= |Preselection|
Output switches in event of overspeed</td><td>{S, H}</td></tr>
<tr><td>1</td><td>|f| <= |Preselection|
Output switches in event of underspeed</td><td>{S, H, A}</td></tr>
<tr><td>2</td><td>|f| == |Preselection|
Output switches in event of leaving the frequency band (Preselection +/- Hysteresis)</td><td>{S, H, A}</td></tr>
<tr><td>3</td><td>Standstill (see parameter 056)
Output switches in event of standstill</td><td></td></tr>
<tr><td>4</td><td>f >= Preselection
Output switches in event of overspeed
May only be used with positive preselection values!</td><td>{S, H}</td></tr>
<tr><td>5</td><td>f <= Preselection
Output switches in event of underspeed
May only be used with positive preselection values!</td><td>{S, H, A}</td></tr>
<tr><td>6</td><td>f == Preselection
Output switches in event of leaving the frequency band (Preselection +/- Hysteresis)
Only used with positive preselection values!</td><td>{S, H, A}</td></tr>
<tr><td>7</td><td>f > 0
Output switches, if a positive frequency (e.g. clockwise direction) is detected. The directional information will be deleted immediately when „standstill“(Parameter 056) is detected.</td><td></td></tr>
<tr><td>8</td><td>f < 0
Output switches, if a negative frequency (e.g. anticlockwise direction) is detected. The directional information will be deleted immediately when „standstill“(Parameter 056) is detected.</td><td></td></tr>
</table></td><td></td><td></td></tr>
<tr><td>040</td><td><u>Switch Mode OUT2 (switching condition for OUT2)</u>:
Settings are analogous to „Switch Mode OUT1“</td><td>0 - 8</td><td>0</td></tr>
<tr><td>041</td><td><u>Switch Mode OUT3 (switching condition for OUT3)</u>:
Settings are analogous to „Switch Mode OUT1“</td><td>0 - 8</td><td>0</td></tr>
<tr><td>042</td><td><u>Switch Mode OUT4 (switching condition for OUT4)</u>:
Settings are analogous to „Switch Mode OUT1“</td><td>0 - 8</td><td>0</td></tr>
</table>

No.	Parameter	Range	Default
043	<u>Switch Mode REL1</u> <u>(switching condition for relay output)</u>:	0 - 8	0

0	|f| >= |Preselection| Output switches in event of overspeed	{S, H}
1	|f| <= |Preselection| Output switches in event of underspeed	{S, H, A}
2	|f| == |Preselection| Output switches in event of leaving the frequency band (Preselection +/- Hysteresis)	{S, H, A}
3	Standstill (see parameter 056) Output switches in event of standstill	
4	f >= Preselection Output switches in event of overspeed May only be used with positive preselection values!	{S, H}
5	f <= Preselection Output switches in event of underspeed May only be used with positive preselection values!	{S, H, A}
6	f == Preselection Output switches in event of leaving the frequency band (Preselection +/- Hysteresis) Only used with positive preselection values!	{S, H, A}
7	f > 0 Output switches, if a positive frequency (e.g. clockwise direction) is detected. The directional information will be deleted immediately when „standstill"(Parameter 056) is detected.	
8	f < 0 Output switches, if a negative frequency (e.g. anticlockwise direction) is detected. The directional information will be deleted immediately when „standstill"(Parameter 056) is detected.	

- When using Switch Mode 2 or 6, a hysteresis is useful in order to avoid "bouncing" of the outputs at the switching point.
- When using Switch Mode 7 or 8, the specified standstill-time (see parameter 056) must be higher than the adjusted wipe period (see parameter 044, ff.). This is helpful to prevent a breakdown of the wipe signal before the wipe period has been elapsed.
- With negative measuring values and presets a higher numerical value is smaller than a lower numerical value, thus e. g. -1000 < -500.

Continuation "Switching Menu":

No.	Parameter	Range	Default
044	<u>Pulse Time OUT1 (Wipe Signal Period of OUT1)</u>: 0: static wipe signal ≠0: wipe signal period in seconds	0 - 9.999 (sec.)	0
045	<u>Pulse Time OUT2 (Wipe Signal Period of OUT2)</u>: Settings are analogous to „Pulse Time OUT1"		
046	<u>Pulse Time OUT3 (Wipe Signal Period of OUT3)</u>: Settings are analogous to „Pulse Time OUT1"		
047	<u>Pulse Time OUT4 (Wipe Signal Period of OUT4)</u>: Settings are analogous to „Pulse Time OUT1"		
048	<u>Pulse Time REL1 (Wipe Signal Period of the relay)</u>: Settings are analogous to „Pulse Time OUT1", but min. 0.025 sec.		

- The minimum wipe period of the control outputs is 1 msec.
  The minimum wipe period of the relay is 25 msec.
- If a wipe signal is adjusted (Parameter 044, ff.) no self-locking function (Parameter 057) can be assigned to the respective output.

049	<u>Hysteresis OUT1:</u> Percental hysteresis of the adjusted switching point (see parameter 027 and 028)	0- 100.0 (%)	0
050	<u>Hysteresis OUT2:</u> Percental hysteresis of the adjusted switching point (see parameter 029 and 030)		
051	<u>Hysteresis OUT3:</u> Percental hysteresis of the adjusted switching point (see parameter 031 and 032)		
052	<u>Hysteresis OUT4:</u> Percental hysteresis of the adjusted switching point (see parameter 033 and 034)		
053	<u>Hysteresis REL1:</u> Percental hysteresis of the adjusted switching point (see parameter 035 and 036)		

- Due to the variance of the frequency measurement an output-bouncing can occur around the limit value. This can be prevented by setting a hysteresis. A reasonable hysteresis value is approximately 1%.
- The setting of a hysteresis is only possible when the parameter "Switch Mode OUT1" is between 0 and 6. (see parameter 039 and following., marking {H})

Continuation "Switching Menu":

<table>
<tr><th>No.</th><th>Parameter</th><th>Range</th><th>Default</th></tr>
<tr><td>054</td><td>

Start-up Mode (start-up delay time window):

Delay time window until the monitoring function is activated. Only useful in combination with switching mode 1 and 5 (see chapter 7.4.6).

To use the start-up delay, it must be assigned to an output (see parameter 055).

The start-up delay will be activated:
a) with next power-up
b) always when after standstill a frequency is detected again

<table>
<tr><td>0</td><td>no start-up delay</td></tr>
<tr><td>1</td><td>start-up delay 1 second</td></tr>
<tr><td>2</td><td>start-up delay 2 seconds</td></tr>
<tr><td>3</td><td>start-up delay 4 seconds</td></tr>
<tr><td>4</td><td>start-up delay 8 seconds</td></tr>
<tr><td>5</td><td>start-up delay 16 seconds</td></tr>
<tr><td>6</td><td>start-up delay 32 seconds</td></tr>
<tr><td>7</td><td>start-up delay 64 seconds</td></tr>
<tr><td>8</td><td>start-up delay 128 seconds</td></tr>
<tr><td>9</td><td>automatically, until the value has been exceeded for the first time (see chapter 7.4.5)</td></tr>
</table>

The defined delay time window is valid for all outputs (see parameter 055).

</td><td>0 - 9</td><td>0</td></tr>
<tr><td>055</td><td>

Startup Output (assignment of a start-up delay to outputs):

By using a 5 bit binary code the start-up delay function can be assigned to the outputs. Settings see below:

<table>
<tr><td>Output:</td><td>RELAY</td><td>OUT4</td><td>OUT3</td><td>OUT2</td><td>OUT1</td></tr>
<tr><td>Bit</td><td>5</td><td>4</td><td>3</td><td>2</td><td>1</td></tr>
<tr><td>Binary:</td><td>10000</td><td>01000</td><td>00100</td><td>00010</td><td>00001</td></tr>
<tr><td>Value:</td><td>16</td><td>8</td><td>4</td><td>2</td><td>1</td></tr>
</table>

Example:
A setting of „17" (binary 10001) means that a start-up delay is assigned to OUT1 and to the relay-output.

</td><td>0 - 31</td><td>0</td></tr>
</table>

- During the start-up delay no frequency monitoring resp. frequency comparison is processed!
- The setting of a start up delay time is only possible when the parameter "Switch Mode OUT1" is 1, 2, 5 or 6. (see parameter 039 and following., marking {A})

Continuation “Switching Menu”:

<table>
<tr><th>No.</th><th>Parameter</th><th>Range</th><th>Default</th></tr>
<tr><td>056</td><td><u>Standstill Time</u> <u>(delay time until „standstill“)</u>:
This parameter defines the delay time until the unit detects „standstill“ after detecting „frequency = 0“.
 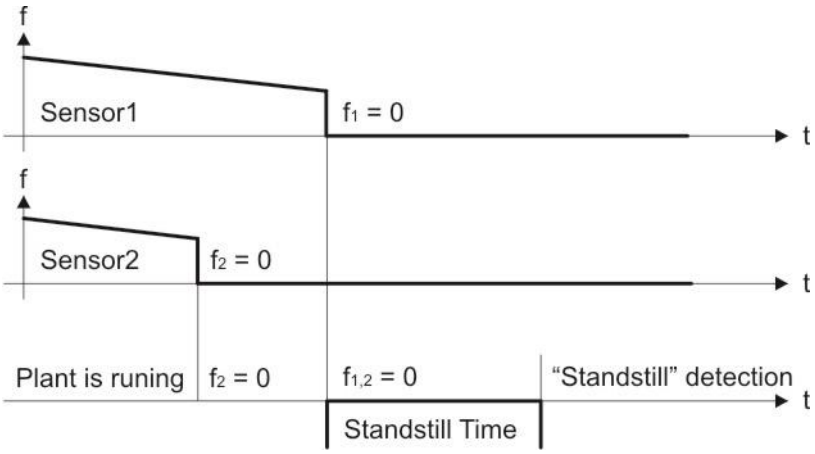

Prior condition is that both input frequencies are detected as „Zero“ ($f_{1,2} = 0$). From that moment, the standstill period runs off and indicates „Standstill“ when elapsed.</td><td>0 - 9.999
(sec.)</td><td>0</td></tr>
<tr><td>057</td><td><u>Lock Output</u> <u>(assignment of a lock-function to an output)</u>:
The assignment of a lock-function to an output can be adjusted by using a 6 bit binary code as follows:
<table>
<tr><td>Output:</td><td>(*)</td><td>RELAY</td><td>OUT4</td><td>OUT3</td><td>OUT2</td><td>OUT1</td></tr>
<tr><td>Bit</td><td>6</td><td>5</td><td>4</td><td>3</td><td>2</td><td>1</td></tr>
<tr><td>Binary:</td><td>100000</td><td>010000</td><td>001000</td><td>000100</td><td>000010</td><td>000001</td></tr>
<tr><td>Value:</td><td>32</td><td>16</td><td>8</td><td>4</td><td>2</td><td>1</td></tr>
</table>
Bits 1 to 5 are used to assign the lock function to the respective outputs. The highest valued bit 6 (*) determines if a locked output can be released exclusively by an external input signal (bit 6 = 0) - see chapter 7.4.7 - or additionally by an automatic reset when “Standstill” is indicated (bit 6 = 1).
Example:
An adjustment of 17 (binary 10001) means that a lock is assigned to output Out1 and to the relay, which can be released exclusively by an external input signal (see chapter 7.4.7).
Further the adjustment 49 (binary 110001) means that the lock-functions of OUT1 and the relay are deleted additionally when „Standstill“ is detected.</td><td>0 - 63</td><td>0</td></tr>
</table>

- If a wipe signal is adjusted (Parameter 044, ff.) no self-locking function (parameter 057) can be assigned to the respective output.
- The setting of a lock output function is only possible when the parameter "Switch Mode OUT1" is between 0 and 6. (see parameter 039 and following., marking {S})

Continuation “Switching Menu”:

No.	Parameter	Range	Default
058	<u>Action Output</u> <u>(output selection for overwriting)</u>:	0 - 31	0

The function to set fixed output conditions by overwriting is **only effective in the “Programming Mode”** (see chapter 5.11). It is used for test purposes and allows to force each output to a defined switching condition.

The „Action Output“ parameter selects the outputs to be tested.
The next Parameter „Action Polarity“ (parameter 059) is used to assign the desired switching conditions to the selected outputs.

The outputs are selectable by using a 5 bit binary code:

Output:	RELAY	OUT4	OUT3	OUT2	OUT1
Bit	5	4	3	2	1
Binary:	10000	01000	00100	00010	00001
Value:	16	8	4	2	1

Example:
A setting of 14 (binary 01110) means that the outputs OUT2, OUT3 and OUT4 are selected for overwriting.

REL	0	No overwriting
OUT4	1	Status see Action Polarity (parameter 059)
OUT3	1	Status see Action Polarity (parameter 059)
OUT2	1	Status see Action Polarity (parameter 059)
OUT1	0	No overwriting

After the test, this parameter must be reset to the "Default".

The safety function of the unit cannot be guaranteed before the commissioning is completed.

Continuation "Switching Menu":

<table>
<tr><th>No.</th><th>Parameter</th><th>Range</th><th>Default</th></tr>
<tr><td>059</td><td>

Action Polarity (setting the output conditions):

This setting-function is **only effective in the "Programming Mode"** (see chapter 5.11) and requires a selection of the corresponding outputs (see parameter 058).

For security reasons the 4 digital outputs are complementary, which means that each output has one direct track and an inversed one (marked by a slash „/"). During normal operation both tracks generally must have opposite conditions, but in the test-mode arbitrary output-conditions can be simulated.

The output-conditions are assignable by a 9 bit binary code:

<table>
<tr><td>OUT:</td><td>REL</td><td>4</td><td>/4</td><td>3</td><td>/3</td><td>2</td><td>/2</td><td>1</td><td>/1</td></tr>
<tr><td>Bit</td><td>9</td><td>8</td><td>7</td><td>6</td><td>5</td><td>4</td><td>3</td><td>2</td><td>1</td></tr>
<tr><td>Value:</td><td>256</td><td>128</td><td>64</td><td>32</td><td>16</td><td>8</td><td>4</td><td>2</td><td>1</td></tr>
</table>

Example:
A setting of 275 (binary 1 0001 0011) causes the following output conditions (from left to right):

<table>
<tr><td>REL</td><td>1</td><td>Contact closed</td></tr>
<tr><td>OUT4</td><td>0</td><td>Low</td></tr>
<tr><td>/OUT4</td><td>0</td><td>Low</td></tr>
<tr><td>OUT3</td><td>0</td><td>Low</td></tr>
<tr><td>/OUT3</td><td>1</td><td>High</td></tr>
<tr><td>OUT2</td><td>0</td><td>Low</td></tr>
<tr><td>/OUT2</td><td>0</td><td>Low</td></tr>
<tr><td>OUT1</td><td>1</td><td>High</td></tr>
<tr><td>/OUT1</td><td>1</td><td>High</td></tr>
</table>

After the test, this parameter must be reset to the "Default".

</td><td>0 - 511</td><td>0</td></tr>
<tr><td>060</td><td>Reserved</td><td></td><td></td></tr>
<tr><td>061</td><td>Reserved</td><td></td><td></td></tr>
</table>

The safety function of the unit cannot be guaranteed before the commissioning is completed.

7.4.7. Control Menu

This chapter describes the features and configuration options of the control inputs. Depending on the operating mode (see chapter 7.4.1), up to two HTL/PNP control inputs (Control1 and Control2) are available at terminal [X10 | CONTROL IN].

Control1	X10 | CONTROL IN, Pin 2, 3
Control2	X10 | CONTROL IN, Pin 4, 5

A control input can only be used, if Control1 or Control2 (see chapter 6.5, et seq.) is available in the selected operation mode.

For security reasons both control inputs are complementary. The switching conditions (active HIGH or active LOW) can be defined by parameter 063.

Basically always the complementary signal of the direct input must be applied to the inverted input. All other conditions are invalid and will not be accepted by the unit. Valid conditions are:

Control1	X10 | CONTROL IN, Pin 2, **HIGH**	X10 | CONTROL IN, Pin 3, **LOW**
	X10 | CONTROL IN, Pin 2, **LOW**	X10 | CONTROL IN, Pin 3, **HIGH**
Control2	X10 | CONTROL IN, Pin 4, **HIGH**	X10 | CONTROL IN, Pin 5, **LOW**
	X10 | CONTROL IN, Pin 4, **LOW**	X10 | CONTROL IN, Pin 5, **HIGH**

If the commands „Set Frequency“ and „Freeze Frequency“ are activated simultaneously by the external control inputs, the function „Set Frequency“ has priority.

„Control Menu“

No.	Parameter	Range	Default
062	**Input 1 Function** (assigns a control function to input „Control1“):	0 - 16	0

Important notes for **DS240 / DS246** see chapter 7.4.1

The switching conditions (active HIGH or active LOW) can be defined by parameter 063.

0	No function assigned	
1	Release lock of output „OUT1“	[dyn]
2	Release lock of output „OUT2“	[dyn]
3	Release lock of output „OUT3“	[dyn]
4	Release lock of output „OUT4“	[dyn]
5	Release lock of output „RELAY“	[dyn]
6	Release all output locks together	[dyn]
7	Set Frequency1 (see parameter 018) Frequency simulation of Sensor1 (see parameter000)	[stat] [PRG]
8	Set Frequency2 (see parameter 025) Frequency simulation of Sensor2 (see parameter000)	[stat] [PRG]
9	Set Frequency12 (see parameter 018 und 025) Frequency simulation of Sensor1 und Sensor2	[stat] [PRG]
10	Freeze Frequency1 Freezes the actual encoder frequency of Sensor1	[stat] [PRG]
11	Freeze Frequency2 Freezes the actual encoder frequency of Sensor2	[stat] [PRG]
12	Freeze Frequency12 Freezes the encoder frequency of Sensor1 and Sensor2	[stat] [PRG]
13	Preselection Change (see chapter 7.4.5) Switchover between the upper and lower switching point. Takes effect to all outputs.	[stat]
14	Clear Drift1 (see parameter 016) Clears the counter of position drift 1.	[dyn]
15	Clear Drift2 (see parameter 023) Clears the counter of position drift 2	[dyn]
16	Clear Drift12 (see parameter 016 und 023) Clears both counters (position drift 1 and 2)	[dyn]

[dyn] = dynamic function if a rising edge appears at the input
[stat] = static permanent function
[PRG] = function only in the “Programming Mode” active

- If the commands „Set Frequency“ and „Freeze Frequency“ are activated simultaneously by the external control inputs, the function „Set Frequency“ has priority.
- The safety function of the unit cannot be guaranteed before the commissioning is completed.

Continuation „Control Menu“

<table>
<tr><th>No.</th><th>Parameter</th><th>Range</th><th>Default</th></tr>
<tr><td>063</td><td><u>Input 1 Config</u> (switching condition of input Control1):
<table>
<tr><td>0</td><td>static function,
active LOW: [X10:2] = Lo, [X10:3] = Hi</td></tr>
<tr><td>1</td><td>static function,
active HIGH: [X10:2] = Hi, [X10:3] = Lo</td></tr>
<tr><td>2</td><td>dynamic function,
active when moving from HIGH to LOW [X10:2]
and simultaneously moving from LOW to HIGH [X10:3]</td></tr>
<tr><td>3</td><td>dynamic function,
active when moving from HIGH to LOW [X10:2]
and simultaneously moving from LOW to HIGH [X10:3]</td></tr>
</table></td><td>0 - 3</td><td>0</td></tr>
<tr><td>064</td><td><u>Input 2 Function</u> (assigns a control function to input Control2):
Identical functions to Parameter 062, but for input <u>Control2</u></td><td>0 - 16</td><td>0</td></tr>
<tr><td>065</td><td><u>Input 2 Config</u> (switching condition of the input Control2):
Identical functions to Parameter 063, but for input <u>Control2</u></td><td>0 - 3</td><td>0</td></tr>
<tr><td>066</td><td>Reserved</td><td></td><td></td></tr>
<tr><td>067</td><td>Reserved</td><td></td><td></td></tr>
<tr><td colspan="4">The safety function of the unit cannot be guaranteed before the commissioning is completed.</td></tr>
</table>

7.4.8. Serial Menu

No.	Parameter	Range	Default
068	**Serial Unit No.** (assigns a serial unit number): The devices can be assigned by unit numbers between 11 and 99 (default setting = 11). Unit numbers which contain a "0" are forbidden because these are used for group- or bulk-addressing.	11 - 99	11
069	**Serial Baud Rate** (serial transmission speed): 0: 9 600 Baud 1: 4 800 Baud 2: 2 400 Baud 3: 1 200 Baud 4: 600 Baud 5: 19 200 Baud 6: 38 400 Baud 7: 56 000 Baud 8: 57 200 Baud 9: 76 800 Baud 10: 115 200 Baud	0 - 10	0
070	**Serial Format** (format of the serial data): 0: 7 data bits, parity even, 1 stop bit 1: 7 data bits, parity even, 2 stop bits 2: 7 data bits, parity odd, 1 stop bit 3: 7 data bits, parity odd, 2 stop bits 4: 7 data bits, no parity*, 1 stop bit 5: 7 data bits, no parity*, 2 stop bits 6: 8 data bits, parity even, 1 stop bit 7: 8 data bits, parity odd, 1 stop bit 8: 8 data bits, no parity*, 1 stop bit 9: 8 data bits, no parity*, 2 stop bits	0 - 9	0

*) „no parity": no secure data transmission guaranteed.
„Parity even" or „Parity odd" must be set for a secure data transmission.

Continuation „Serial Menu“:

<table>
<tr><th>No.</th><th>Parameter</th><th>Range</th><th>Default</th></tr>
<tr><td>071</td><td><u>Serial Page</u> <u>(serial page number of a variable)</u>:
The Parameter serves only for diagnosis purposes by the manufacturer.</td><td>0 - 11</td><td>0</td></tr>
<tr><td>072</td><td><u>Serial Init:</u>
This parameter determines the baud rate (see parameter 069) for the transmission of the initialization values to the operator surface OS6.0 respectively to the BG230 programming and display unit.
<table>
<tr><td>0</td><td>The initialization values will be transmitted with 9600 baud. After that, the unit returns back to the baud rate set by the user.</td></tr>
<tr><td>1</td><td>The initialization values will be transmitted with the user setting. After that, the unit continues with this baud rate.</td></tr>
</table>
With settings higher than 9600 baud the duration of the initialization can be shortened.</td><td>0 - 1</td><td>0</td></tr>
<tr><td>073</td><td>Reserved</td><td></td><td></td></tr>
</table>

7.4.9. Splitter Menu
(Looping of Sensor Signals for further Target Units)

The Splitter function is only integrated in DS230 and DS240.

<table>
<tr><th>No.</th><th>Parameter</th><th>Range</th><th>Default</th></tr>
<tr><td>074</td><td><u>RS Selector (determination of the RS422 output source)</u>:

Important notes for DS240 / DS246 see chapter 7.4.1

This parameter defines which input frequency (sensor1 or sensor2) is exported at terminal [X4 | RS422 OUT].

Which input is assigned to which channel (sensor1 or sensor2) is set in the operating mode (see chapter 7.4.2 / parameter 000).

<table>
<tr><td>0</td><td>Sensor1
A copy of the sensor1 frequency appears at terminal [X4 | RS422 OUT] (as specified by parameter 000)</td></tr>
<tr><td>1</td><td>Sensor2
A copy of the sensor2 frequency appears at terminal [X4 | RS422 OUT] (as specified by parameter 000)</td></tr>
</table>

Independent from the input signal, always incremental RS422 square-wave pulses are generated.</td><td>0 - 1</td><td>0</td></tr>
<tr><td>075</td><td>Reserved</td><td></td><td></td></tr>
<tr><td>076</td><td>Reserved</td><td></td><td></td></tr>
<tr><td>077</td><td>Reserved</td><td></td><td></td></tr>
</table>

7.4.10. Analog Menu
(Analog Output Configuration)

The setting of the F1-F2-Selection (Parameter 003) determines, which frequency (sensor1 or sensor2) is used to generate the analog output signal.

No.	Parameter	Range	Default
078	**Analog Start** (initial value of the conversion range in Hz): Defines the initial frequency, at which the analog output should set its initial value of 4 mA.	-500 000.0 - 500 000.0 (Hz)	0
079	**Analog End** (final value of the conversion range in Hz): Defines the final frequency, at which the analog output should set its final value of 20 mA.		100 000
080	**Analog Gain** (gain of the D/A converter in %): With a setting of 100% the frequency curve between „Analog Start“ and „Analog End“ equates to the whole stroke from 4 mA to 20 mA (thus 16 mA). With a setting of e. g. 50 % the stroke would be only 8 mA and the analog output only a value of 4 + 8 = 12 mA when reaching „Analog End“.	1 - 1 000 (%)	100
081	**Analog Offset** (fine adjustment of the zero point in µA): Accurate adjustment of the analog offset within a fine range.	-25 - 25 (µA)	0
082	**Reserved**		

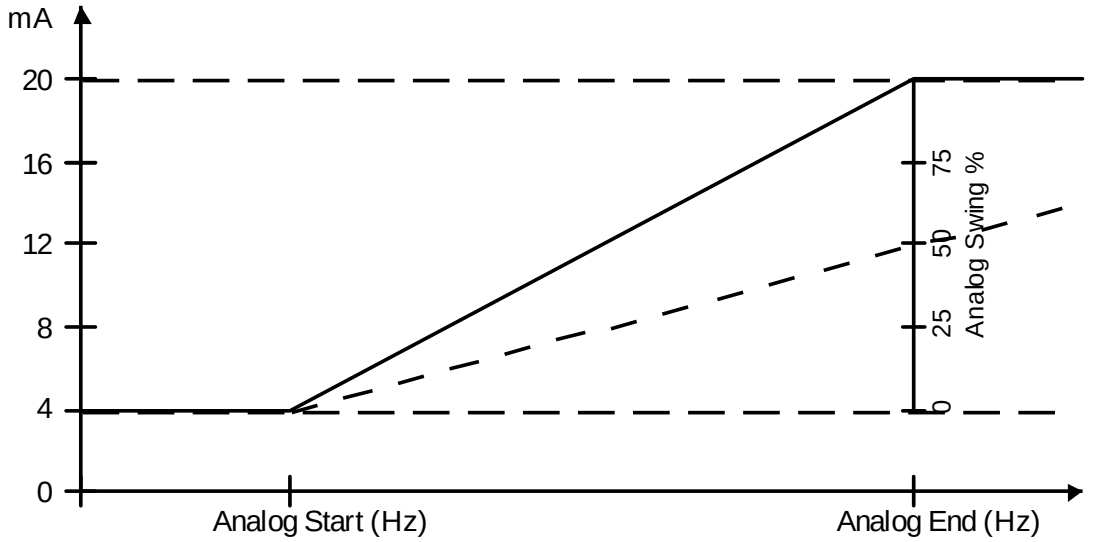

8. Start-Up the Plant

- „Programming Mode“ (DIL switch) only for start-up
- Set all DIL switch sliders to „ON“ after start-up
- Protect the DIL switch sliders after start-up
  (e. g. by covering with an adhesive tape)
- Normal operation is only permitted when the yellow LED is permanently off

8.1. Cabinet installation

- The unit must be in a mechanically and technically perfect condition.
- The unit must be snapped onto a 35 mm DIN rail (according to EN 60715) by using the clip at the rear.
- It must be ensured that the permissible environmental conditions of the specification are met accordingly.
- All wirings must be executed in accordance with the general provisions for wiring (see www.motrona.com).

In order to prevent simultaneous damages to the cables by external influences,
the encoder resp. sensor lines must be kept physically separate from one another.

8.2. Parametrization

In order to ensure proper functionality the parameters must be set appropriate values. The next two chapters 8.2.1 and 8.2.2 will describe important parameters, which must be set or checked in each case.

The parameters of the subsequent chapters must be set or checked only when the respective outputs are used.

8.2.1. Basic Settings

The following parameters must be set or checked in each case. Important basic settings of the device will be defined here. These parameters settings will also influence other parameters, the device function and the error detection time.

No.	Parameter	Notice
000	Operational Mode	
001	Sampling Time	
002	Wait Time	
003	F1-F2 Selection	
010	Power-up Delay	
016	Position Drift1	
017	Phase Err Count1	
023	Position Drift2	
024	Phase Err Count2	
056	Standstill Time	

8.2.2. Sensor1 and Sensor 2 Settings (Divergence)

The following parameters must be set or checked in each case. Important adjustments to calibrate both sensor frequencies (Sensor1 and Sensor2) are defined here. These parameters settings will also influence other parameters, the device function and the error detection time.

No.	Parameter	Notice
004	Div. Switch %-f	
005	Div. %-Value	
006	Div. f-Value	
007	Div. Calculation	
008	Div. Filter	
013	Direction1	
014	Multiplier1	
015	Divisor1	
020	Direction2	
021	Multiplier2	
022	Divisor2	

8.2.3. SinCos Output Settings

Depending on the version and the operational mode, the unit is equipped with a SinCos output.
The SinCos output cannot be configured.

8.2.4. RS422 Output Settings

These parameter may be used only, if the RS422 output is used.
The RS422 output essentially depends on the following parameters:

No.	Parameter	Notice
000	Operational Mode	
074	RS Selector	

8.2.5. Analog Output Settings

These parameter may be used only, if the analog output is used.
The analog output essentially depends on the following parameters:

No.	Parameter	Notice
000	Operational Mode	
003	F1-F2 Selection	
078	Analog Start	
079	Analog End	
080	Analog Gain	
081	Analog Offset	

8.2.6. Control Output Settings

These parameter may be used only, if control outputs are used.
The control outputs are essentially dependent on the following parameters:

OUT1:

No.	Parameter	Notice
000	Operational Mode	
003	F1-F2 Selection	
027	Preselect OUT1.H	
028	Preselect OUT1.L	
039	Switch Mode OUT1	
044	Pulse Time OUT1	
049	Hysteresis OUT1	
054	Startup Mode	
055	Startup Output	
057	Lock Output	
062	Input1 Function	
063	Input1 Configuration	
064	Input2 Function	
065	Input2 Configuration	

OUT2:

No.	Parameter	Notice
000	Operational Mode	
003	F1-F2 Selection	
029	Preselect OUT2.H	
030	Preselect OUT2.L	
040	Switch Mode OUT2	
045	Pulse Time OUT2	
050	Hysteresis OUT2	
054	Startup Mode	
055	Startup Output	
057	Lock Output	
062	Input1 Function	
063	Input1 Configuration	
064	Input2 Function	
065	Input2 Configuration	

Continuation „Control Output Settings“:

OUT3:

No.	Parameter	Notice
000	Operational Mode	
003	F1-F2 Selection	
031	Preselect OUT3.H	
032	Preselect OUT3.L	
041	Switch Mode OUT3	
046	Pulse Time OUT3	
051	Hysteresis OUT3	
054	Startup Mode	
055	Startup Output	
057	Lock Output	
062	Input1 Function	
063	Input1 Configuration	
064	Input2 Function	
065	Input2 Configuration	

OUT4:

No.	Parameter	Notice
000	Operational Mode	
003	F1-F2 Selection	
033	Preselect OUT4.H	
034	Preselect OUT4.L	
042	Switch Mode OUT4	
047	Pulse Time OUT4	
052	Hysteresis OUT4	
054	Startup Mode	
055	Startup Output	
057	Lock Output	
062	Input1 Function	
063	Input1 Configuration	
064	Input2 Function	
065	Input2 Configuration	

8.2.7. Relay Output Settings

These parameter may be used only, if relay outputs are used.
The relay outputs are essentially dependent on the following parameters:

No.	Parameter	Notice
000	Operational Mode	
003	F1-F2 Selection	
035	Preselect REL1.H	
036	Preselect REL1.L	
043	Switch Mode REL1	
048	Pulse Time REL1	
053	Hysteresis REL1	
054	Startup Mode	
055	Startup Output	
057	Lock Output	
062	Input1 Function	
063	Input1 Configuration	
064	Input2 Function	
065	Input3 Configuration	

8.2.8. Test Parameters

The parameters below may be used only for test purposes. After the tests, these parameters must be set back to "default" values.

No.	Parameter	Notice
009	Error Simulation	
018	Set Frequency1	
025	Set Frequency2	
058	Action Output	
059	Action Polarity	

8.3. Preparation before first start-up

Before first start-up

- ✓ the unit must be in a perfect technical condition, properly installed and wired
- ✓ the unit must be set to the unit-state “Programming Mode” by setting the DIL switch slider 3 “OFF”
- ✓ the unit must be connected via the USB port to a PC / notebook or alternatively to an optional BG320 programming- and display unit
- ✓ the operator surface OS6.0 must be installed correctly and running on the PC
- ✓ all Parameters must be set to correct values

- Commissioning may only be performed by qualified personnel.
- The machine / equipment must be protected from unauthorized persons, because undefined states of the machine / plant can occur during the first start up procedure.
- The machine must be securely mounted and ready to operate.
- The safety function of the unit cannot be guaranteed before the commissioning is completed.

8.4. Checklist for Parameter Settings

General settings:

1. Does Parameter 000 (Operational Mode) correspond to the selected encoder types?
2. Are correct preset values defined in the „Preselection Menu“ (Parameter 027, et seq.)?
3. Are all outputs and relays adjusted in accordance to the demanded switching conditions? (see chapter …)

Optional settings:

1. Are the switching characteristics and command assignments for the HTL inputs defined?
2. Is the source input for the RS422 splitter output selected (see parameter 074)?
3. Is the analog output scaled with a start- and an end-value (see parameter 078, 079)?

8.5. Definition of the Directions

In order to define the directions, the machine must move resp. turn to its working direction. The frequencies of sensor 1 and 2 are indicated in the “Monitor” window of the operator surface. The direction of each frequency can be changed by setting the respective „Direction“ Parameter (see parameter 013 resp. 020).

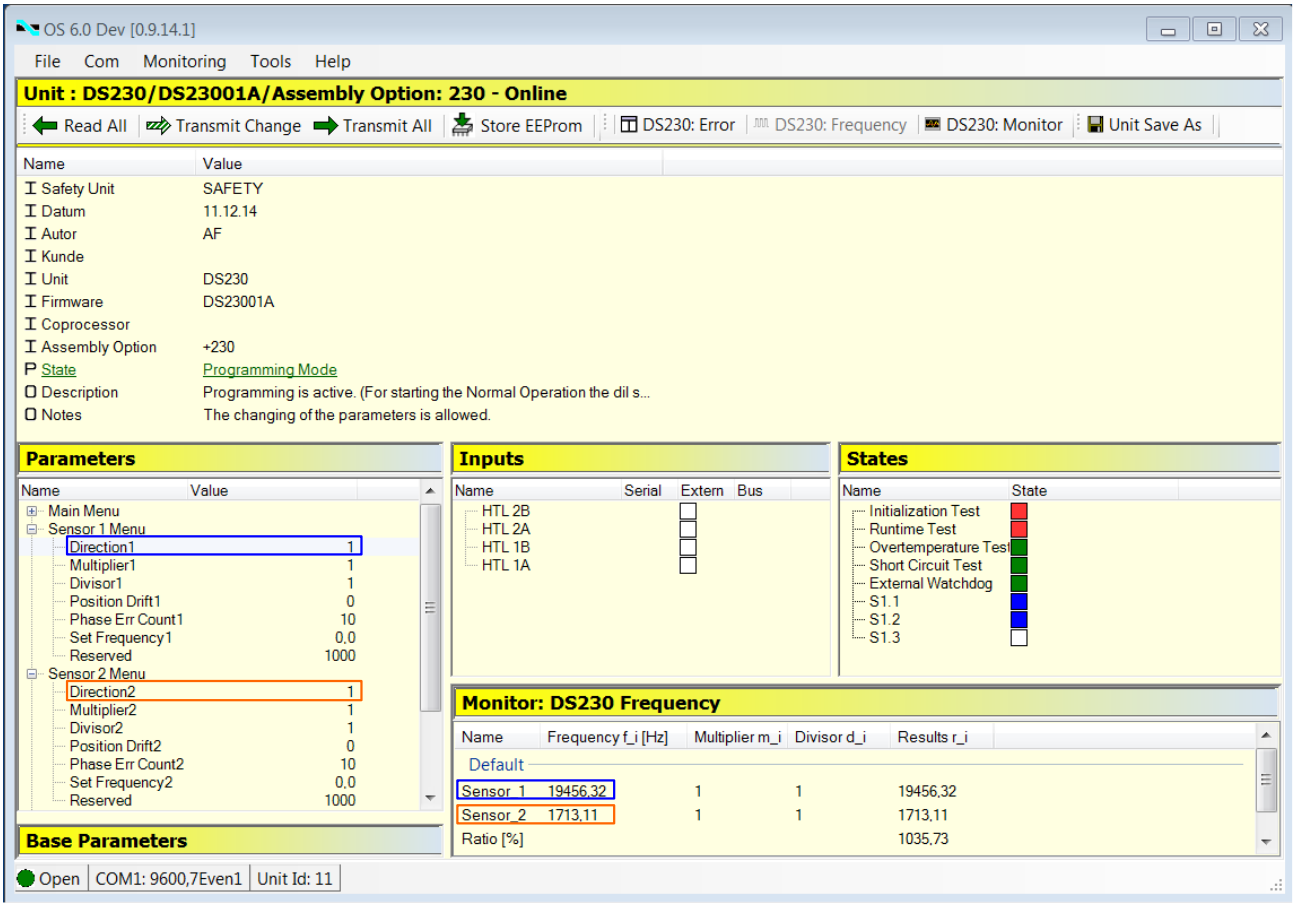

8.6. Sensor Channel Adaption

When using two sensors with a different number of pulses or in case of a mechanical speed reduction between both encoders, then the higher frequency must be adjusted to the lower one. For this calculation the scaling factors (see chapter 7.4.3) are used.

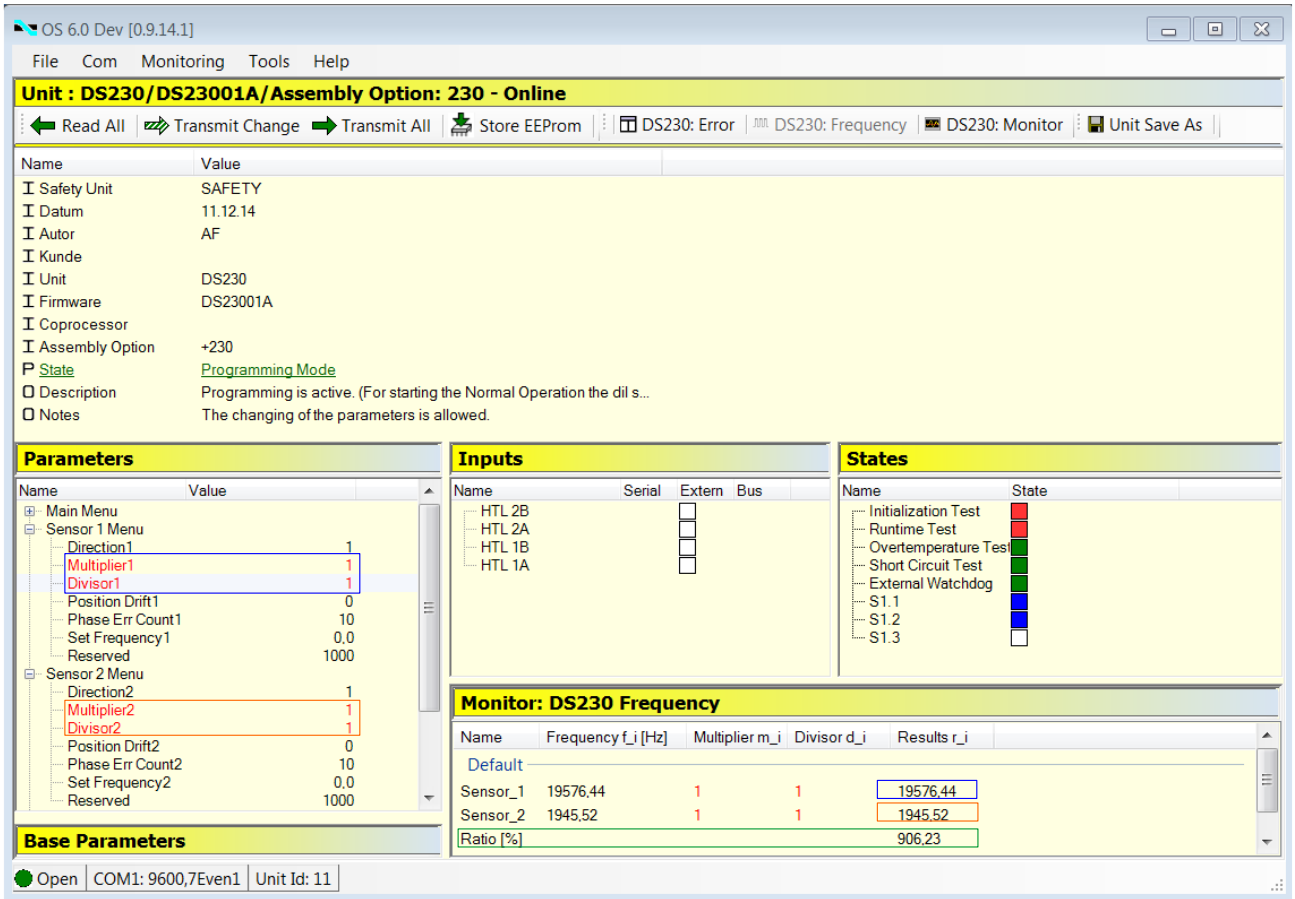

In the example above the frequency 2 is smaller by the factor 0.0994 than frequency 1.
For adjustment, the “Multiplier 1” (parameter 014) should be set to 994 and the “Divisor 1” (parameter 015) to 10.000.

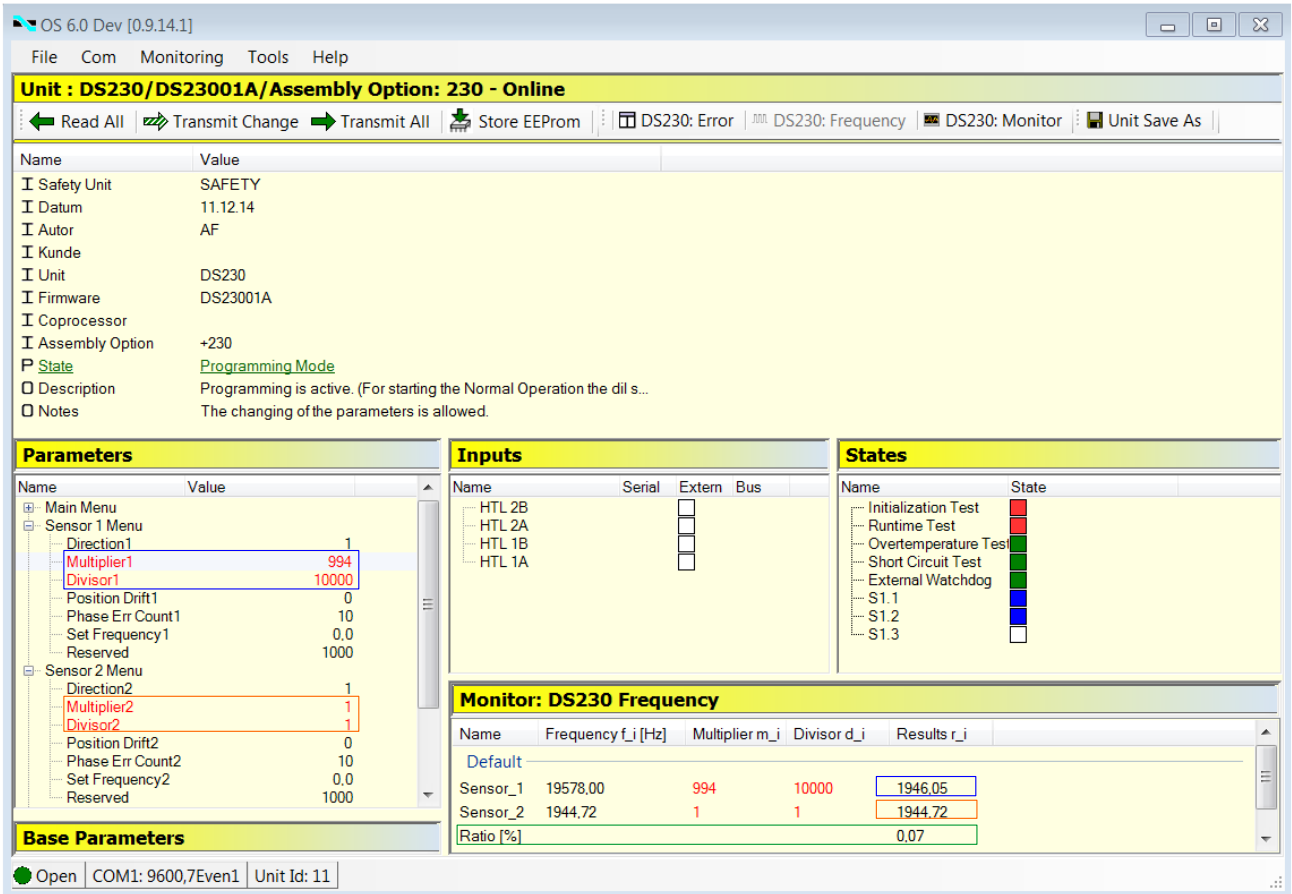

By scaling the frequency 1 both internally calculated frequencies are approximately equal and the calculated ratio is close to "0".

8.7. Completion of Commissioning

Finally all application-dependent Parameters should be checked for plausibility again. The digital outputs and relays can be tested for their correct behavior by using the parameter 058 "Output Action" from the menu "Switching Menu".

The safety-related relay output opens in case of failures or if a programmed switching condition (see chapter 7.4.5) is reached. Further the contact will be open, if the unit is in the de-energized state.

It is imperative to test the function of the relay and the evaluation in the target device finally!

- The user of the equipment is responsible for ensuring all relevant parts of the system to a safe state, when the relay contact is open.

After commissioning, the unit state “Operational Mode” must be left by setting the slider 3 of the DIL switch back to its „ON“ position. For a normal operation always all 3 sliders of the DIL switch must be set to „ON“.

- „Programming Mode“ (DIL switch) only for start-up
- Set all DIL switch sliders to „ON“ after start-up
- Protect the DIL switch sliders after start-up (e. g. by covering with an adhesive tape)
- Normal operation is only permitted when the yellow LED is permanently off

9. Error Detection

In order to ensure a maximum of operational safety and reliability, the units are equipped with several and profound monitoring-functions. The monitoring allows an immediate recognition and messaging of possible failures and malfunctions.

In case of errors:

- The relay contact switches to its open (safety) condition (interruption of the safety circuit)
- The analog output (with DS236 and DS246 units) sets to 0 mA and no more current range (4 … 20 mA) is given.
- All digital outputs are set to LOW (no more inversion between Out X and /Out X)
- No more incremental signals are available at the RS422 output (Tri-State with pulldown cut off).
- The DC-offset of the SinCos output will be shifted in order o signalize an error to the target unit.

The following types of error recognition are distinguished:

- Initialization Error
- Runtime Error

Both variants are exactly described in the following two pages…

9.1. Error Representation

Error Representation	Reference
Front LED's	see chapter 5.14 (LEDs / Status Indication)
Display unit BG230	see BG230 user manual
Operator surface OS6.0	see OS6.0 user manual

9.2. Initial Error

These monitors / tests are processed automatically when switching the unit on.

Error code BG230	Error Operator Software OS6.0	Instruction
H' 0000 0001	ADC Error	Error of the analog output. See runtime error, error code H' 0000 0400
H' 0000 0002	I2C Error	Internal error. Switch off and switch on the unit. If the error repeats contact manufacturer.
H' 0000 0004	OTH Error	Internal error. Switch off and switch on the unit. If the error repeats contact manufacturer.
H' 0000 0008	SCI Error	Internal error. Switch off and switch on the unit. If the error repeats contact manufacturer.
H' 0000 0010	DIO Error	Error of the control inputs. See runtime error, error code H' 0000 2000
H' 0000 0020	GPI Error	Error of the control inputs. See runtime error, error code H' 0000 2000
H' 0000 0040	CAP Error	Internal error. Switch off and switch on the unit. If the error repeats contact manufacturer.
H' 0000 0080	SPI Error	Internal error. Switch off and switch on the unit. If the error repeats contact manufacturer.
H' 0000 0100	QEP Error	Internal error. Switch off and switch on the unit. If the error repeats contact manufacturer.
H' 0000 0200	SCO Error	Internal error. Switch off and switch on the unit. If the error repeats contact manufacturer.
H' 0000 0400	CPU Error	Internal error. Switch off and switch on the unit. If the error repeats contact manufacturer.
H' 0000 0800	RAM Error	Internal error. Switch off and switch on the unit. If the error repeats contact manufacturer.
H' 0000 1000	WDO Error	Internal error. Switch off and switch on the unit. If the error repeats contact manufacturer.

9.3. Runtime Error

These monitors / tests are processed automatically and continuously in the background.

Error code BG230	Error Operator Software OS6.0	Instruction
H' 0000 0001	SIN/COS Channel 1 Error	Error of the input SINCOS IN 1. Faulty SinCos-encoder, faulty wiring or internal error of the unit. Check encoder and wiring. If the error repeats contact manufacturer
H' 0000 0002	SIN/COS Channel 2 Error	See error code H' 0000 0001
H' 0000 0004	External Supply Channel 1 Error	Error of the encoder supply. Disconnect encoder supply. Switch off and switch on the unit. If error code is off → external error e. g. faulty wiring or short circuit. If error code is still active → internal error (contact manufacturer)
H' 0000 0008	External Supply Channel 2 Error	See error code H' 0000 0004
H' 0000 0010	External Supply BG Error	Error of the supply of the BG230. Remove the BG230. Switch off and switch on the unit. If error code is off → external error e. g. short circuit in the BG230. If error code is still active → internal error (contact manufacturer)
H' 0000 0020	External Supply BG Status Error	See error code H' 0000 0010
H' 0000 0040	External Supply GV Status Error	See error code H' 0000 0004
H' 0000 0080	External Supply Short Circuit Error	See error code H' 0000 0004 See error code H' 0000 0010
H' 0000 0100	Temperature Error	Error of the temperature. Switch off and cool down the unit. Switch on the unit. If error code is off → external error e. g. illegal temperature range. If error code is still active → internal error (contact manufacturer)
H' 0000 0200	Readback Digital Output Error	Error of the control outputs. Remove connector at [X2 | CONTROL OUT] Switch off and switch on the unit. If error code is off → external error e. g. faulty wiring or short circuit. If error code is still active → internal error (contact manufacturer)

Continuation „Runtime Error“:

Error code BG230	Error Operator Software OS6.0	Instruction
H' 0000 0400	Sequence Analog Output Error	Error of the analog output. Switch off the unit. Remove the wiring and link X4:2 and X4:3 Switch on the unit. If error code is off → external error e. g. faulty wiring or open circuit. If error code is still active → internal error (contact manufacturer)
H' 0000 0800	Readback Relay Output Error	Error of the relay output. Contact manufacturer.
H' 0000 1000	Readback Analog Output Error	See error code H' 0000 0400
H' 0000 2000	GPI Error	Error of the control inputs. Faulty wiring, illegal signal states (no complementary signals) or internal error.
H' 0000 4000	Sequence DAC Output Error	See error code H' 0000 0400
H' 0000 8000	DAC Output Error	See error code H' 0000 0400
H' 0001 0000	Phase Channel 1 Error	Error of the phase of Sensor1. Check parameter 017. Switch off and switch on the unit.
H' 0002 0000	Phase Channel 2 Error	Error of the phase of Sensor2. Check parameter 024. Switch off and switch on the unit.
H' 0004 0000	Frequency Error	Error of the divergence. Check parameter 004 to 021. Switch off and switch on the unit.
H' 0008 0000	Drift Error 1	Error of the drift of Sensor1. Check parameter 016. Switch off and switch on the unit.
H' 0010 0000	Drift Error 2	Error of the drift of Sensor2. Check parameter 023. Switch off and switch on the unit.
H' 0020 0000	ESM Error	Internal error. Switch off and switch on the unit. If the error repeats contact manufacturer.
H' 0040 0000	Wrong Parameter Error Stimulation	Error of the Error Simulation. Check parameter 009. Switch off and switch on the unit.
H' 0080 0000	Register Error	Internal error. Switch off and switch on the unit. If the error repeats contact manufacturer.
H' 0100 0000	RTI/QUP Cycle Error	
H' 0200 0000	External Clock Error	
H' 0400 0000	ADC Error	
H' 0800 0000	I2C Error	
H' 1000 0000	Initialisation Test Error	

9.4. Error Clearing

Error states can generally be cleared by switching the power off and on again (after removing the error source).

9.5. Error Detection Time

Basically it is not possible to specify an exact error detection time because the error detection depends on many factors.

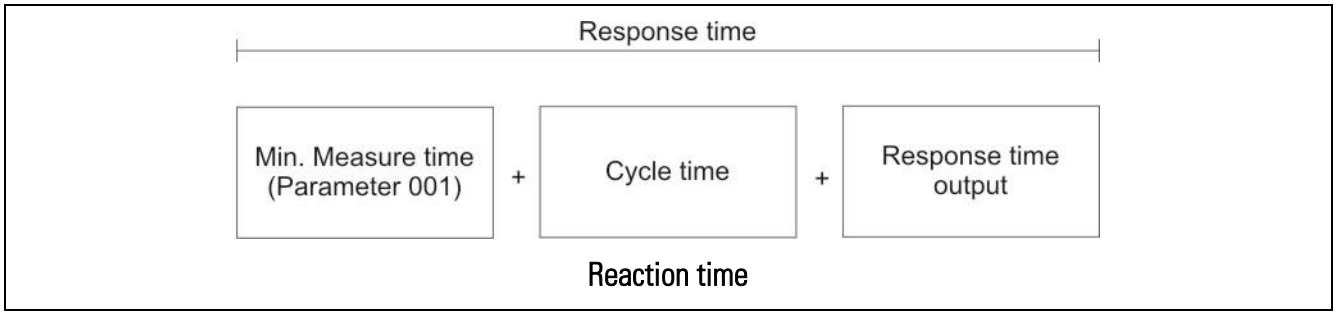

The error detection time depends (amongst other things) on the following factors:

- Input frequency
- Parameters like:
  Sampling Time, Wait Time, Divergence, Power-up Delay, Standstill Time, …
- Reaction time of the output

10. Parameter List

No.	Parameter	Min. Value	Max. Value	Default	Characters	Decimal Places	Serial Code
000	Operational Mode	0	9	0	1	0	A0
001	Sampling Time	1	9999	1	4	3	A1
002	Wait Time	10	9999	1000	4	3	A2
003	F1-F2 Selection	0	1	0	1	0	A3
004	Div. Switch %-f	0	99999	10000	5	2	A4
005	Div. %-Value	1	100	10	3	0	A5
006	Div. f-Value	0	9999	3000	4	2	A6
007	Div. Calculation	0	1	0	1	0	A7
008	Div. Filter	0	20	1	2	0	A8
009	Error Simulation	0	2	1	1	0	A9
010	Power-up Delay	1	1000	100	4	3	B0
011	Reserved	0	10000	1000	5	0	B1
012	Reserved	0	10000	1000	5	0	B2
013	Direction1	0	1	0	1	0	B3
014	Multiplier1	1	10000	1	5	0	B4
015	Divisor1	1	10000	1	5	0	B5
016	Position Drift1	0	100000	0	6	0	B6
017	Phase Err Count1	1	1000	10	4	0	B7
018	Set Frequency1	-5000000	5000000	0	87	1	B8
019	Reserved	0	10000	1000	5	0	B9
020	Direction2	0	1	0	1	0	C0
021	Multiplier2	1	10000	1	5	0	C1
022	Divisor2	1	10000	1	5	0	C2
023	Position Drift2	0	100000	0	6	0	C3
024	Phase Err Count2	1	1000	10	4	0	C4
025	Set Frequency2	-5000000	5000000	0	87	1	C5
026	Reserved	0	10000	1000	5	0	C6
027	Preselect OUT1.H	-5000000	5000000	10000	87	1	C7
028	Preselect OUT1.L	-5000000	5000000	20000	87	1	C8
029	Preselect OUT2.H	-5000000	5000000	30000	87	1	C9
030	Preselect OUT2.L	-5000000	5000000	40000	87	1	D0
031	Preselect OUT3.H	-5000000	5000000	50000	87	1	D1
032	Preselect OUT3.L	-5000000	5000000	60000	87	1	D2
033	Preselect OUT4.H	-5000000	5000000	70000	87	1	D3
034	Preselect OUT4.L	-5000000	5000000	80000	87	1	D4
035	Preselect REL1.H	-5000000	5000000	1000	87	1	D5
036	Preselect REL1.L	-5000000	5000000	2000	87	1	D6
037	Reserved	0	10000	1000	5	0	D7
038	Reserved	0	10000	1000	5	0	D8

Continuation „Parameter List“:

No.	Parameter	Min. Value	Max. Value	Default	Characters	Decimal Places	Serial Code
039	Switch Mode OUT1	0	10	0	1	0	D9
040	Switch Mode OUT2	0	10	0	1	0	E0
041	Switch Mode OUT3	0	10	0	1	0	E1
042	Switch Mode OUT4	0	10	0	1	0	E2
043	Switch Mode REL1	0	10	0	1	0	E3
044	Pulse Time OUT1	0	9999	0	4	3	E4
045	Pulse Time OUT2	0	9999	0	4	3	E5
046	Pulse Time OUT3	0	9999	0	4	3	E6
047	Pulse Time OUT4	0	9999	0	4	3	E7
048	Pulse Time REL1	0	9999	0	4	3	E8
049	Hysteresis OUT1	0	1000	0	4	1	E9
050	Hysteresis OUT2	0	1000	0	4	1	F0
051	Hysteresis OUT3	0	1000	0	4	1	F1
052	Hysteresis OUT4	0	1000	0	4	1	F2
053	Hysteresis REL1	0	1000	0	4	1	F3
054	Startup Mode	0	10	0	1	0	F4
055	Startup Output	0	31	0	2	0	F5
056	Standstill Time	0	9999	0	4	3	F6
057	Lock Output	0	31	0	2	0	F7
058	Action Output	0	31	0	2	0	F8
059	Action Polarity	0	511	0	3	0	F9
060	Reserved	0	10000	1000	5	0	G0
061	Reserved	0	10000	1000	5	0	G1
062	Input1 Function	0	10	0	1	0	G2
063	Input1 Config	0	3	0	1	0	G3
064	Input2 Function	0	10	0	1	0	G4
065	Input2 Config	0	3	0	1	0	G5
066	Reserved	0	10000	1000	5	0	G6
067	Reserved	0	10000	1000	5	0	G7
068	Serial Unit No.	11	99	11	2	0	90
069	Serial Baud Rate	0	10	0	2	0	91
070	Serial Format	0	9	0	1	0	92
071	Serial Page	0	11	0	2	0	~0
072	Serial Init	0	1	1	1	0	9~
073	Reserved	0	10000	1000	5	0	H0
074	RS Selector	0	1	0	1	0	H1
075	Reserved	0	10000	1000	5	0	H2
076	Reserved	0	10000	1000	5	0	H3
077	Reserved	0	10000	1000	5	0	H4

Continuation „Parameter List“:

No.	Parameter	Min. Value	Max. Value	Default	Characters	Decimal Places	Serial Code
078	Analog Start	-5000000	5000000	0	87	1	H5
079	Analog End	-5000000	5000000	100000	87	1	H6
080	Analog Gain	1	1000	100	4	0	H7
081	Analog Offset	-100	100	0	83	0	H8
082	Reserved	0	10000	1000	5	0	H9

11. Technical Specifications

Power supply:	Input voltage: Protective circuit: Ripple: Power consumption: Protection: Connections:	18 ... 30 VDC with reverse polarity protection reverse polarity protection max. 10 % at 24 VDC approx. 150 mA (unloaded) external fuse (2.5 A, medium time lag) necessary X3, screw terminal, 2-pin, 1.5 mm²
Encoder supply:	Number: Output voltage: Output current: Protection:	2 approx. 2 VDC less the input voltage max. 200 mA per encoder short circuit proof
SinCos inputs:	Number of inputs: Signal tracks: Amplitude: DC offset: Frequency: Connections:	2 SIN+, SIN-, COS+, COS- 0.8 ... 1.2 Vpp 2,4 … 2,6 VDC max. 500 kHz X6 and X7, SUB-D (male), 9-pin
Incremental inputs:	Number of inputs: Format: Frequency: Connections:	2 RS422 standard (differential signal A, /A, B, /B) max. 500 kHz X8 and X9, screw terminal, 7-pin, 1.5 mm²
Control-/ incremental inputs:	Number of inputs: Application: Signal level: Load: Frequency (control): Frequency (incremental): Connections:	2 (each performs complementary) for HTL encoders, proximity switches or control commands HTL / PNP (10 ... 30 V) max. 15 mA max. 1 kHz max. 250 kHz X10, screw terminal, 5-pin, 1.5 mm²
SinCos output: (safety related)	Splitter output: Signal tracks: Amplitude: DC offset: Frequency: Connection:	of input SinCos 1 SIN+, SIN-, COS+, COS- 0.8 ... 1.2 Vpp 2,4 … 2,6 VDC max. 500 kHz X5, SUB-D (female), 9-pin
Incremental output: (safety related)	Splitter output: Format: Frequency: Connections:	of input SinCos 1, SinCos 2, RS422 1, RS422 2, HTL 1 or HTL 2 proximity switch RS422 (differential signals A, /A, B, /B) max. 500 kHz X4, screw terminal, 7-pin, 1.5 mm²
Analog output: (safety related)	Current output: Resolution: Accuracy: Connection:	4 ... 20 mA (load max. 270 Ohm) 14 bit ± 0.1 % X4, screw terminal, 7-pin, 1.5 mm²
Control outputs: (safety related)	Number of outputs: Output voltage: Output current: Switching characteristic: Protective circuit: Connection:	4 (each performs complementary) HTL (approx. 2 VDC less the input voltage) max. 30 mA per output Push-Pull short-circuit-proof X2, screw terminal, 8-pin, 1.5 mm²
Relay output: (safety related)	Number of relays: Switching capability: Switching capacity: Connection:	two relays in series with forced-guided contacts (NO) 5 ... 36 VDC 5 mA ... 5 A X1, screw terminal, 2-pin, 1.5 mm²

Continuation „Technical Specifications“:

USB interface:	Version: Connection:	USB 1.0 X12, USB-B (female)
Display:	Green LED: Yellow LED:	„ON“ „ERROR“
Switches:	DIL switch: Marking:	1 x 3-pin S1
Conformity and standards:	MD2006/42EC LV 2006/95/EC: EMC 2004/108/EC: Vibration resistance: Shock resistance: RoHs 2011/65/EU:	EN ISO 13849-1 EN 61508 EN 62061 EN 61010-1 EN 61000-6-2 EN 61000-6-3 EN 61000-6-4 EN 61326-3-2 EN 60068-2-6 (sine, 7 g, 10 – 200 Hz, 20 cycles) EN 60068-2-27 (half sine, 30 g, 11 ms, 3 shocks) EN 60068-2-27 (half sine, 17 g, 6 ms, 4000 shocks) EN 50581
Safety characteristic data:	Classification: Approved Safety Function: System structure: System architecture: DC_{avg}: SFF: $MTTF_D$: PFH: λ_{SD}: λ_{SU}: λ_{DD}: λ_{DU}: Safety functions:	SIL3/PLe (depends on the used encoder input signals) Certification No.: 44 207 14018601 dual-channel Cat. 3 / HFT = 1 97,07 % 99,2 % 38,1 Jahre $3{,}76 * 10^{-8}\ h^{-1}$ $1{,}93 * 10^{-6}\ h^{-1}$ $4{,}64 * 10^{-8}\ h^{-1}$ $2{,}94 * 10^{-6}\ h^{-1}$ $6{,}14 * 10^{-8}\ h^{-1}$ equivalent ... EN61800-5-2 for SS1, SS2, SOS, SLS, SDI, SSM (depending on the used encoder input signals)
Housing:	Material: Mounting: Dimensions: Protection class: Weight:	Plastic to 35 mm top hat rail (according to EN 60715) 50 x 100 x 165 mm (B x H x T) IP20 approx. 390 g
Ambient temperature:	Operation: Storage:	-20 °C ... +55 °C (without condensation) -25 °C ... +70 °C (without condensation)
Programming module BG230 (optional):	Display: Operation:	OLED-Display Touch screen

11.1. Dimensions

(inclusive BG230 at front)

Front:

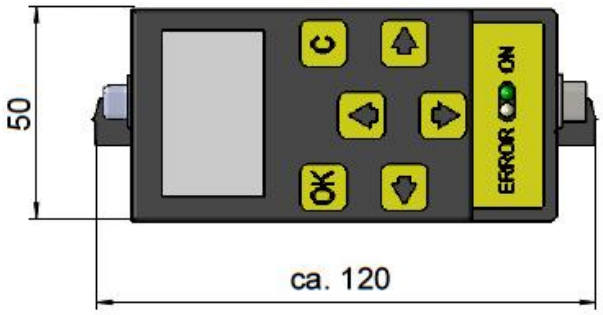

Rear:

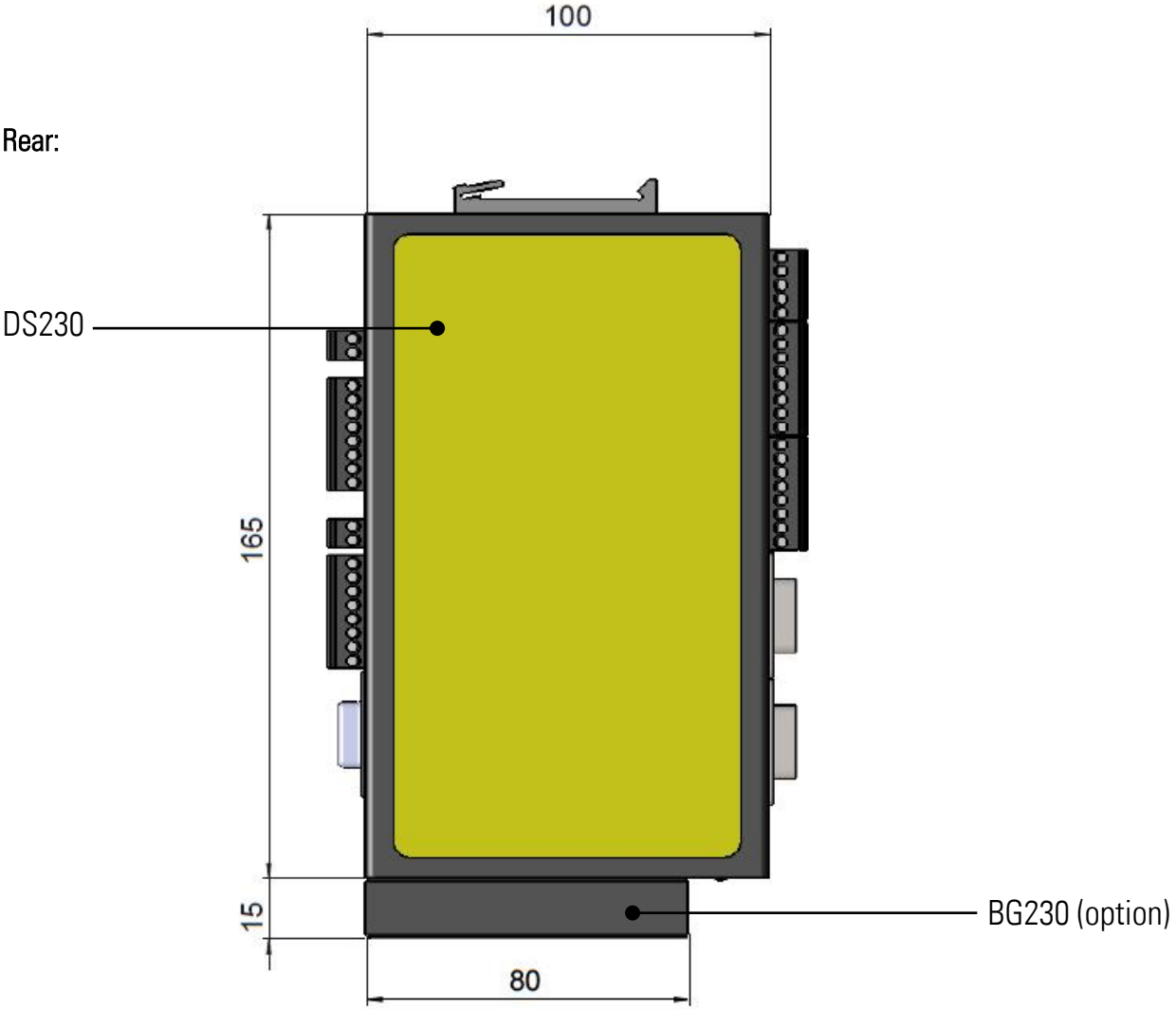

12. Certificate

TÜV NORD

ZERTIFIKAT
CERTIFICATE

Hiermit wird bescheinigt, dass die Firma / *This is to certify, that the company*

motrona GmbH
Zwischen den Wegen 32
78239 Rielasingen
Deutschland

berechtigt ist, das unten genannte Produkt mit dem abgebildeten Zeichen zu kennzeichnen.
is authorized to provide the product described below with the mark as illustrated.

Geprüft nach *Tested in accordance with*	**EN ISO 13849 - Kat. 3, PL e** **EN 61508 - SIL3** **EN 62061 - SIL_{CL} 3**
Beschreibung des Produktes *(Details s. Anlage 1)* Description of product *(Details see Annex 1)*	**DS2xx Wächter Serie zur sicherheitsgerichteten Überwachung von Drehzahl, Stillstand und Drehrichtung** *DS2xx monitor series for safety-related monitoring of speed, standstill and direction of rotation*
Fertigungsstätte *Manufacturing plant*	**motrona GmbH** **Zwischen den Wegen 32** **78239 Rielasingen** **Deutschland**

TÜV NORD
TÜV NORD CERT GmbH
Approved Safety Function
acc. to applied safety standards
EN ISO 13849-1
EN 61508
EN 62061
PL 'e'
SIL 3
SIL_{CL} 3

Registrier-Nr. / *Registered No.* 44 207 14018601
Prüfbericht Nr. / *Test Report No.* 3513 5111
Aktenzeichen / *File reference* 8000429910

Gültigkeit / Validity
von / *from* 2015-06-11
bis / *until* 2020-06-10

F. Hegenfeld

Zertifizierungsstelle der TÜV NORD CERT GmbH
Certification body of TÜV NORD CERT GmbH

Essen, 2015-06-11

TÜV NORD CERT GmbH Langemarckstraße 20 45141 Essen www.tuev-nord-cert.de machinery@tuev-nord.de

Bitte beachten Sie auch die umseitigen Hinweise
Please also pay attention to the information stated overleaf

DAkkS
Deutsche
Akkreditierungsstelle
D-ZE-12007-01-06